B7Σ-5A

LIFTING CAPACITY

Excavator equipped with ROPS/FOPS Cabin and Rubber Crawlers
r: Reach from swing center line : ft-in(mm)
h: Lift point height : ft-in(mm)
w: Lifting capacity : lbs(kg)
P: Load point

: Rated over the front end

: Rated over the side

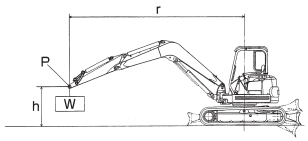

1. The Rated Lifting Capacities that are indicated below are based on ISO 10567 and do not exceed 87% of theExcavator's hydraulic lifting capacity or 75% of its static tilt load (tipping load) capacity.
2. The following operating criteria are also applicable to the calculation of these maximum loads;
   a) The "load point" is the location of the front bolt on the arm.
   b) The three indicated machine positions are :
      (i) arm over the front end (blade down),
      (ii) arm over the front end (blade up), and
      (iii) arm over the side (blade up).
   c) The operating cylinder is the Boom Cylinder.
3. The weight of the Excavator's bucket, hook, sling and other lifting accessories have been taken into consideration when calculating these maximum loads.

LIFT POINT HEIGHT	r: LIFT RADIUS - in (mm)				r: LIFT RADIUS - in (mm)				r: LIFT RADIUS - in (mm)			
h: in (mm)	RATED LIFT CAPACITY OVER END BLADE DOWN lbs (kg)				RATED LIFT CAPACITY OVER END BLADE UP lbs (kg)				RATED LIFT CAPACITY OVER SIDE BLADE UP lbs (kg)			
	MAX	196.9 (5000)	137.8 (3500)	98.4 (2500)	MAX	196.9 (5000)	137.8 (3500)	98.4 (2500)	MAX	196.9 (5000)	137.8 (3500)	98.4 (2500)
195.9(5000)	*4653(2110)		*4873(2210)		3870(1755)		*4873(2210)		3848(1745)		*4873(2210)	
157.5(4000)	*4564(2070)		*5160(2340)		3076(1395)		*5160(2340)		2944(1335)		*5160(2340)	
118.1(3000)	*4454(2020)		*5755(2610)		2547(1155)		4796(2175)		2437(1105)		4862(2205)	
78.7(2000)	*4366(1980)	*4719(2140)	*6350(2880)	*9129(4140)	2238(1015)	2635(1195)	4642(2105)	7596(3445)	2150(975)	2547(1155)	4443(2015)	7552(3425)
39.4(1000)	*4300(1950)	*4785(2170)	*7012(3180)	*9018(4090)	2128(965)	2481(1125)	4201(1905)	6538(2965)	2084(945)	2414(1095)	4024(1825)	6229(2825)
Ground(0)	*4278(1940)		*6637(3010)	*8644(3920)	2194(995)		3958(1795)	6538(2965)	2128(965)		3782(1715)	6207(2815)
-39.4(-1000)	*4145(1880)		*6196(2810)	*7982(3620)	2326(1055)		3804(1725)	6802(3085)	2238(1015)		3649(1655)	6185(2805)
-78.7(-2000)	*3925(1780)		*5204(2360)	*6218(2820)	2745(1245)		3804(1725)	*6218(2820)	2679(1215)		3782(1715)	*6218(2820)

Note : The maximum loads marked with an asterisk (*) were limited by the Excavator's hydraulic lifting capacity rather than by its static tilt load (tipping load) capacity.

STANDARD EQUIPMENT

- Blade
- Joystick pilot controls
- Arm rests
- Reclining seat
- Seat belt
- Rubber or steel crawler tracks
- ROPS/FOPS cabin
- Windshield wiper
- Defroster
- Traveling lever
- PTO arm end piping
- Traveling alarm function
- 2 way operation pattern change
- Built-in type boom light
- Exterior cabin work light
- Operation manual

(Please note that the standard equipment supplied with a specific Excavator could vary from this list. Consult your Yanmar dealer for confirmation.)

Note : All information presented in this Brochure is subject to change without notice.

YANMAR AMERICA CORP.
CONSTRUCTION EQUIPMENT DEPT.
101 International Parkway, Adairsville, GA 30103, U.S.A.
TEL:770-877-7570 FAX:770-877-7572
http://www.yanmar.com

Printed in Japan
000060E2772Ⓢ 0707 0409Ⓝ

YANMAR
EXCAVATOR

B7Σ-5A



B7Σ-5A
Output: 58.2 hp (43.4 kW)
Operating weight
Cabin 17816 / 17706 lbs (8080 / 8030 kg)

YANMAR - YOUR BEST PARTNER FOR BUILDING THE FUTURE



Yanmar's Unique Σ boom- A Breakthrough in the Concept of the Ultra Tight Turning Machine

The B7Σ is for users who want to dig deeper and more efficiently. It is ideal for jobs in restricted urban sites and densely built-up areas. Some suggested usage areas include water, sewage and gas piping work and laying communications cables.

Deep, Efficient Digging with Σ. It's so Easy, too. Small jobs that had to be done by hand are mechanized now.

The Long Third Boom for Deep and Powerful Left Offset Digging

The combination of the unique offset mechanism and far reaching third boom lets you go in deeper even at sites with driven sheet piles.

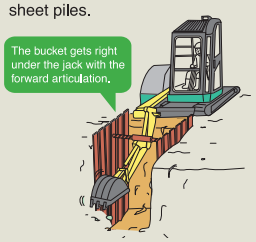

The Σ boom Turns like Magic in Restricted Sites

The Σ boom machine is so convenient even in restricted pipe laying sites, etc., on roads in urban areas, turning even at the left offset position to get close to the dump truck. Digging, turning and unloading in series is smooth and efficient.

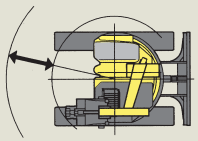

Neat Earth Leveling on the Truck

The Σ boom reaches to the corners of the truck for neat leveling, making unloading easier, too.

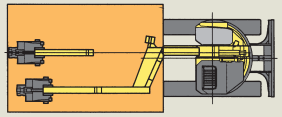

The Efficiency of not always Worrying about your Bucket. Reliable Interference Prevention

Yanmar original mechanical bucket interference prevention system protects operator from accidents and it increases job efficiency by without caring bucket interference compare to micro-computer bucket interference prevention system.

High Tensile Steel for Superior Work Stability and Weight Reduction

The Σ boom is made from high tensile steel, which is about 1.5 times stronger than the ordinary steel. The lower weight and optimum center of gravity produce a stable balance.

Efficiency and Stability Beyond Your Regular Ultra Tight Turning Machine

Yanmar's unique ViPPS (Hydraulic system) and ViCTAS track systems of the famous Super ViO series give work efficiency and power close to those of standard, non-ultra tight turning machines.

ViPPS

Fast and Smooth Multiple job Operation with Yanmar's 3 Pump Hydraulic System

ViPPS has the arm preferential conflux hydraulic circuit. During multiple operation of the boom, arm, bucket and turning, the arm speed is ensured through the preferential flow of hydraulic oil to the arm circuit. The cycle of digging and unloading soil is smooth and efficient.



ViCTAS

It Grips a Broad Area of Ground for Higher Stability: Yanmar's Balanced Undercarriage.

Yanmar's ViCTAS undercarriage offers better stability without extending the machine width. The track rollers on the tipping line are installed further outwards than in conventional models to improve the sideways balance. The longer crawler ground contact enhances the longitudinal balance, so the ground is gripped well without increasing machine weight. The lifting capacity is boosted, too.

Friendly to Users and the Environment
Comfortable Operation Unique to B7Σ

Spacious Operator's Area for Comfortable Operation

The operator's space is wider thanks to the Σ boom.
Both the seat sides and legroom are spacious.
The big operator's area makes lengthy work less fatiguing.





Slide-up windshield



Air conditioner standard

Heater air outlet



Arm cylinder on the back of boom is protected from damage



To prevent damage to the hydraulic hoses. They are covered for safety



The alarm monitor checks the engine oil, cooling water temp. and battery level. Potential troubles are indicated well in advance.

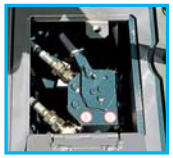

2-way pattern control lever (ISO or OPTION)



Side hood housing the fuel filler port, battery, hydsraulic oil, etc.



Large opening rear hood facilitates maintenance

ROPS / FOPS Cabin with seat belt protects against operator injury.



Clean & Silent

Yanmar C&S Direct Injection Diesel Engine Friendly to Users and Environment

Clean exhaust and powerful output are compatible in the new engine from Yanmar.
It's a clean and silent engine friendly both to users and the environment.



Super Low Noise Design

The C&S (clean and silent) engines of Yanmar: ultra low noise through advanced noise reduction technology that mitigates stress and fatigue

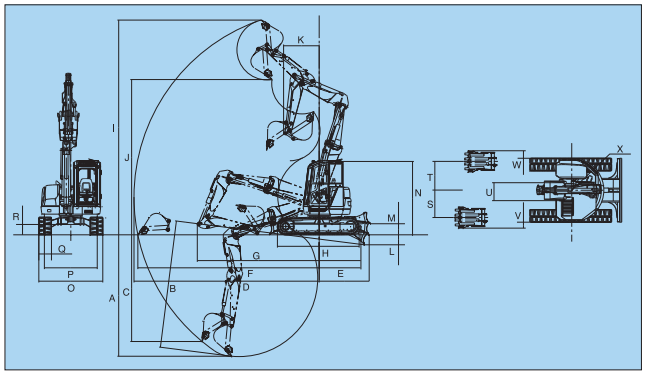

Dimensions

Unit: ft-in (mm)

A	B	C	D	E	F	G	H	I	J	K	L	M
14' 3" (4350)	14' 9" (4500)	12' 4" (3770)	21' 6" (6550)	5' 9" (1760)	21' 0" (6410)	19' 0" (5780)	9' 6" (2890)	24' 11" (7600)	18' 0" (5490)	3' 11" (1200)	1' 2" (355)	1' 4" (400)

N	O	P	Q	R	S	T	U	V	W	X
8' 11" (2715)	7' 5" (2260)	6' 2" (1870)	1' 6" (450)	1' 3" (380)	3' 4" (1020)	3' 2" (965)	2' 6" (750)	5" (125)	1' 2" (350)	R 3' 8" (R1130)

Specifications

Model			B7Σ-5A
Type			Cabin
Operating weight (ISO)	Rubber track	lbs (kg)	17706(8030)
	Steel track	lbs (kg)	17816(8080)
Engine	Type		Water cooled, 4-cyl. diesel
	Model		4TNV98-XBV
	Output	hp (kW)/RPM	58.2 (43.4) /2000
Performance	Digging force (arm/bucket)	lb (kN)	8655/12320 (38.5/54.8)
	Traveling speed Rubber	mph (km/h)	2.9/1.7 (4.7/2.7)
	Traveling speed Steel	mph (km/h)	2.8/1.6 (4.5/2.5)
	Average ground pressure Rubber	psi (kPa)	5.06 (34.9)
	Average ground pressure Steel	psi (kPa)	5.12 (35.3)
Hydraulic system	Pump displacement	GPM (L / min)	18.6x2+17.6x1 70.3x2+66.7x1
	Set pressure	psi (Mpa)	3550x2,3000 (24.5x2,20.6)
	Hydraulic system capacity	USgal (L)	26.4 (100)
Undercarriage	Shoe width	ft-in (mm)	1'6"(450)
	Blade widthxheight	ft-in (mm)	7'5"x1'5"(2260x435)
Various data	Fuel tank capacity	USgal (L)	26.4 (100)
	Noise level (ISO : LwA)	dB(A)	92

Hydraulic P.T.O.

Specifications \ Output	PSI(kPa)	GPM (L/min) 1900 RPM
Single / Double actions	3556 (24517)	18.6 (70.3)