MODEL P09x

9mm Rotary Potentiometer
Multi – Ganged
Conductive Plastic Element
100,000 Cycle Life
Metal shaft / Bushing
Switch / Push-Lock Option
RoHS Compliant

For more information about this product, visit our website at:
www.potentiometers.com

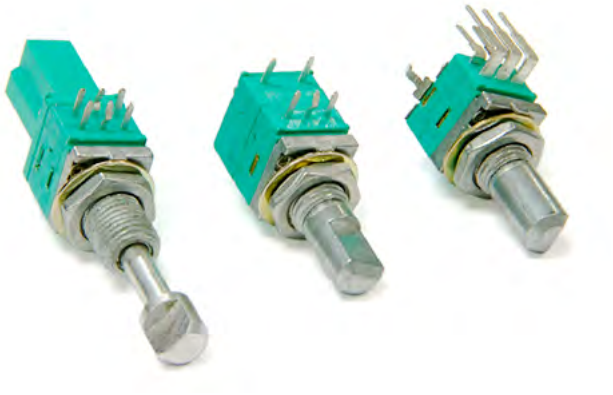

Model Styles

Side Adjust, PCB pins, up to 8 gangs	P09xN
Side Adjust, PCB pins, up to 8 gangs, with Switch	P09xS
Top Adjust, PCB pins, up to 2 gangs	P09x5N
Side Adjust, PCB pins, with Push-Lock, up to 2 gangs	P09xP

Electrical Specifications

Resistance Range, Ohms	1K-500K
Standard Resistance Tolerance	± 20%
Residual Resistance	20 ohms max.
Input Voltage, maximum	50 Vac max.
Power rating, Watts	Taper B: 0.05W
	Other Tapers: .025W
Dielectric Strength	300Vac, I minute
Insulation Resistance, Minimum	100M ohms at 250Vdc
Sliding Noise	100mV max.
Gang Error (Multi-ganged)	-40dB – 0dB, ±3dB
Actual Electrical Travel, Nominal	260°
Switch Contact Resistance	< 100 milliohms
Switch Power Rated	3.0A at 16Vdc

Mechanical Specifications

Total Mechanical Travel	300°± 10°
Static Stop Strength	50 oz-in
Rotational Torque, Maximum	2.5 oz-in
Switch Rotational Angle, Maximum	50°

Specifications subject to change without notice.

© State Electronics
36 State Route 10, STE 6 • East Hanover, NJ 07936-0436
973-887-2550 • Toll Free 1-800-631-8083 • Fax 973-887-1940
http://www.potentiometers.com

MODEL P09x

Environmental Specifications

Operating Temperature Range	-10°C to +70°C
Rotational Life	100,000 cycles

Ordering Information

P09 x N - F C 20 B R100K

- Model Series
- Number of gangs
- Style
- Shaft Type
- Full CCW Shaft Position: see below
- Shaft Length "L" see below
- Tapers
  - A = Audio
  - B = Linear
  - C = Reverse Audio
- Total Resistance

Shaft Types (P09xN, P09xS, P09x5N)

E–TYPE

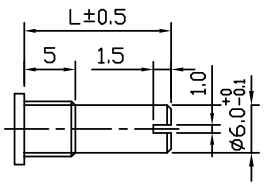

L	15	20	25	30

F–TYPE

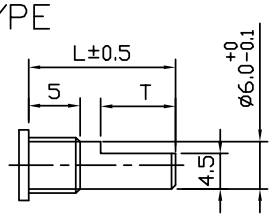

L	15	20	25	30
T	7	12	12	12

Q–TYPE

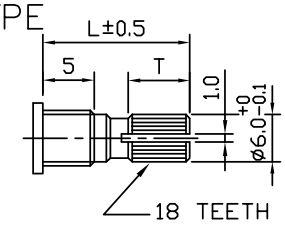

L	15	20	25	30
T	6	12	12	12

Shaft Types for Push-Lock (P09xP)

E–TYPE

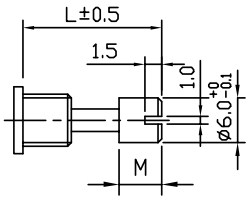

L	25	30	35
M	5.7	10.7	15.7

F–TYPE

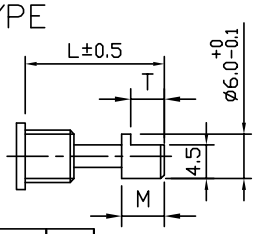

L	25	30	35
T	4.5	7	12
M	5.7	10.7	15.7

Q–TYPE

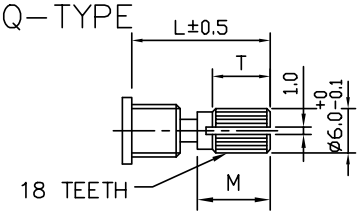

L	25	30	35
T	3	6	12
M	5.7	10.7	15.7

© State Electronics
36 State Route 10, STE 6 • East Hanover, NJ 07936-0436
973-887-2550 • Toll Free 1-800-631-8083 • Fax 973-887-1940
http://www.potentiometers.com

MODEL P09x

Shaft Position (F-Type Shaft)

Dashed lines on Type "C" and Type "A" shows position of adjustment slot for E-Type and Q-Type shafts

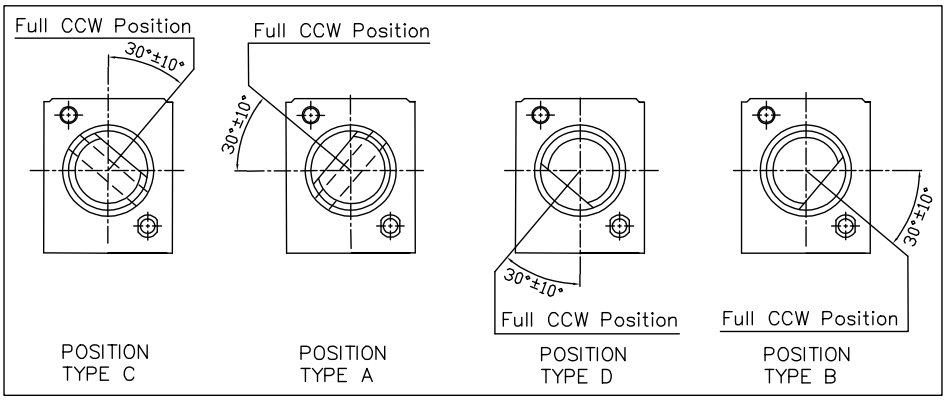

Standard Resistance Values, Ohms

1K 2K 5K 10K 20K 50K 100K 200K 500K

Outline Dimensions (Inch/mm)

Model P09xN (Side Adjust, PCB pins, up to 8 gangs)

X = Number of Gangs

X	1	2	3	4	5	6	7	8
H	7.05	9.55	14.55	17.05	22.05	24.55	29.55	32.0

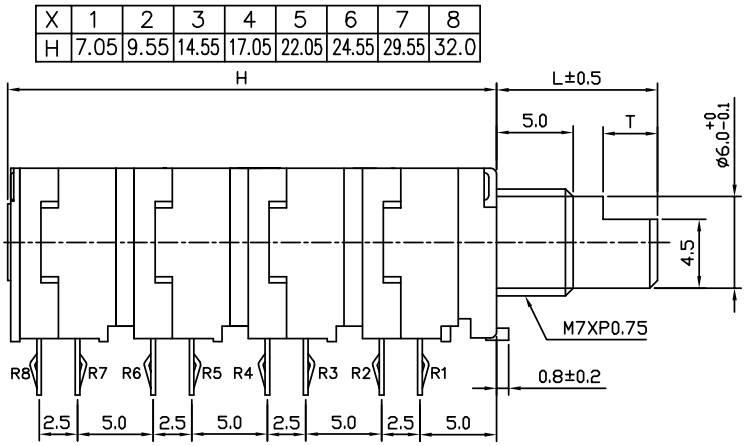

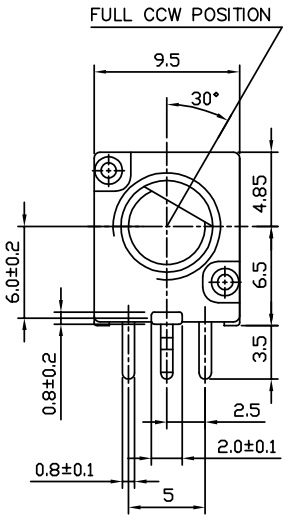

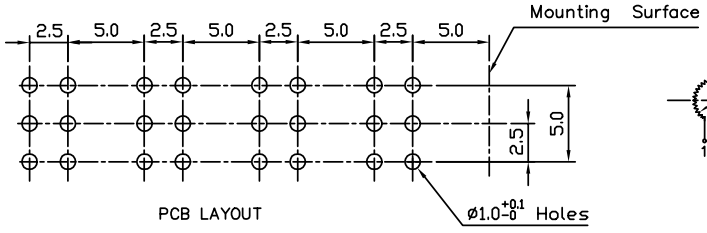

PCB LAYOUT

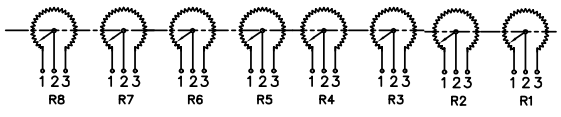

CIRCUIT DIAGRAM

© State Electronics
36 State Route 10, STE 6 • East Hanover, NJ 07936-0436
973-887-2550 • Toll Free 1-800-631-8083 • Fax 973-887-1940
http://www.potentiometers.com

MODEL P09x

Model P09xS (Side Adjust, PCB pins, up to 8 gangs, with Switch)

X = Number of Gangs + 1 Switch

X	1	2	3	4	5	6	7	8
H	13.3	15.8	20.8	23.3	28.3	30.8	35.8	38.25

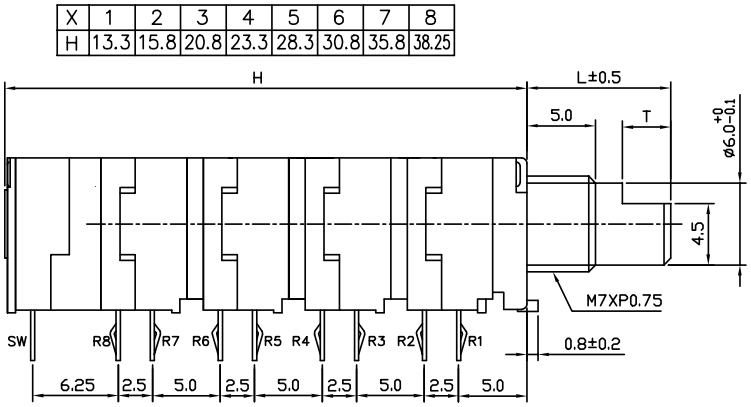

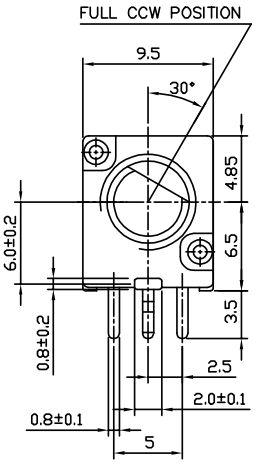

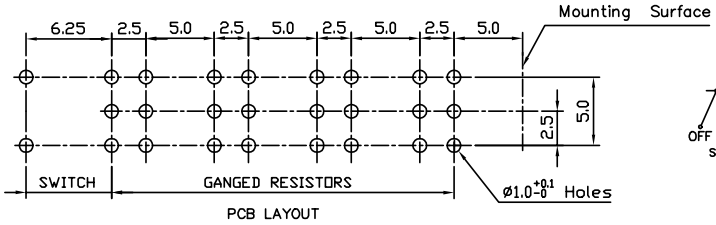

PCB LAYOUT

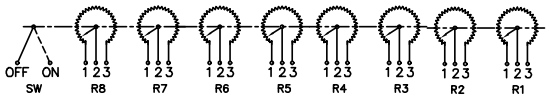

CIRCUIT DIAGRAM

Model P09x5N (Top Adjust, PCB pins, up to 2 gangs)

X = Number of Gangs

X	1	2
H	7.45	9.15

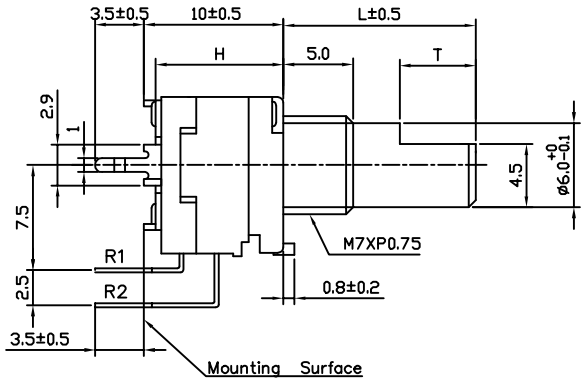

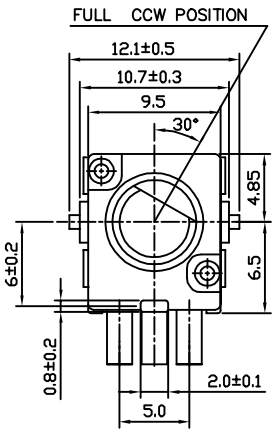

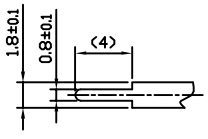

DETAIL OF TERMINALS

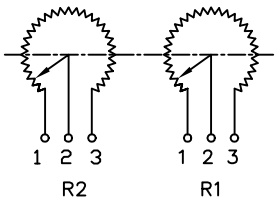

CIRCUIT

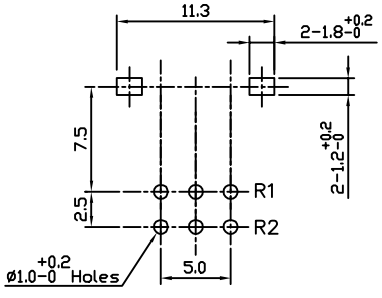

PCB LAYOUT

© State Electronics
36 State Route 10, STE 6 • East Hanover, NJ 07936-0436
973-887-2550 • Toll Free 1-800-631-8083 • Fax 973-887-1940
http://www.potentiometers.com

MODEL P09x

Model P09xP (Side Adjust, PCB pins, with Push-Lock, up to 2 gangs)

X = Number of Gangs

X	1	2
H	20.75	23.25

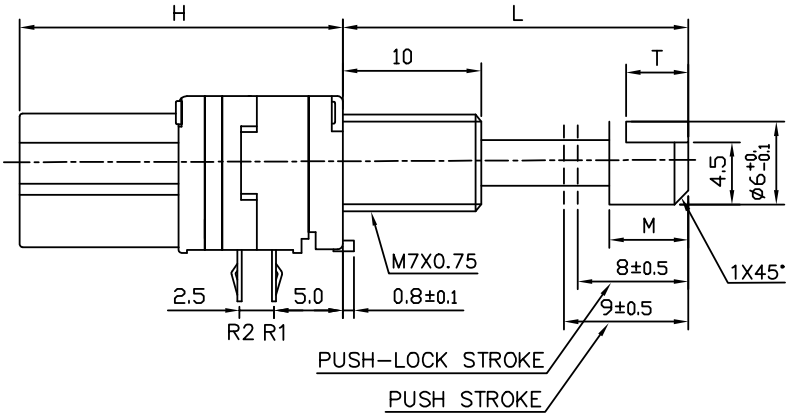

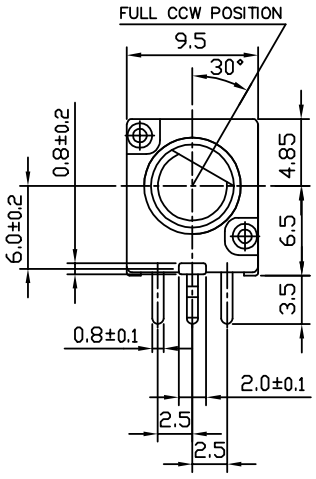

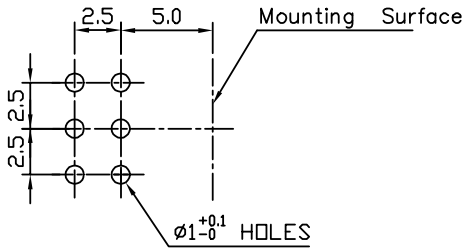

PCB LAYOUT

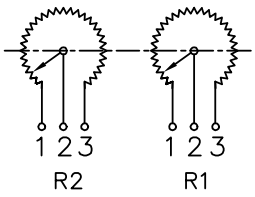

CIRCUIT

Taper Curves

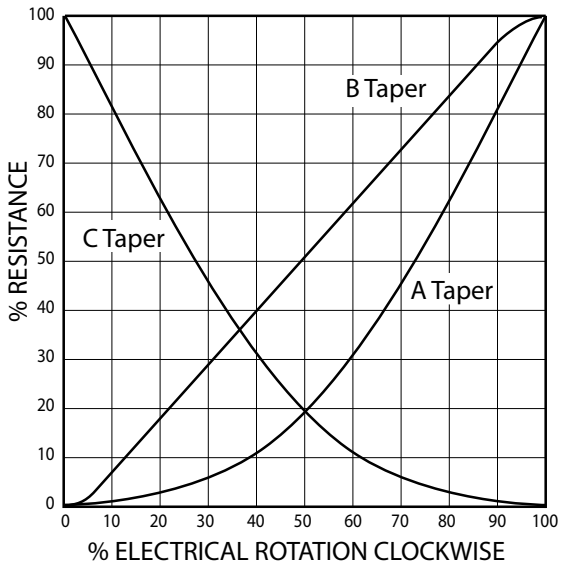

© State Electronics

36 State Route 10, STE 6 • East Hanover, NJ 07936-0436
973-887-2550 • Toll Free 1-800-631-8083 • Fax 973-887-1940
http://www.potentiometers.com