Ohio

Lifting Magnet Systems









OHIO MAGNETICS

SUBSIDIARY OF HBD INDUSTRIES, INC.

OHIO MAGNETICS

OHIO MAGNETICS, INC. ISO 9001 2000 CERTIFIED STEARNS MAGNETICS

OUR COMMITMENT TO YOU...

Since 1917, Ohio Magnetics, Inc. has been a leading supplier of ferrous material handling equipment to highly productive scrap processing facilities, railroads, foundries, and steel producers around the world.

We have found that by using a balanced approach to short and long term business goals, we can offer unparalleled service to our customers, and plan for growth through product and facilities development. Leadership in product development... lifting magnets and related power equipment has been the hallmark of Ohio Magnetics. Our innovations have lead the way from the bulky, heavy, copper wound magnets of the early 20TH century to today's specialized array of lifting systems.

Customers rely on our wealth of practical experience to help them develop new ways to increase lifting magnet and systems productivity. They enjoy working with a company that is highly attuned to their needs regarding price, delivery and aftermarket service.

When you do business with Ohio Magnetics, you get products offering low initial investment and long life, combined with responsive service.

You have our word on it...OHIO.



Ohio Magnetics, Inc.
Maple Heights, Ohio

36"Ohio Magnetics magnet lifts railroad track rails. Southern Pennsylvania Railroad-1919

Lifting pig iron ingots with 20" Ohio Magnetics magnet Baker Tractor & Truck Co. - 1917





Ohio Magnetics, Inc. is a subsidiary company of **HBD Industries, Inc.** HBD companies manufacture quality custom-designed and standard industrial products serving many diverse industries and markets. Products manufactured by HBD Industries, Inc. include: AC/DC/BLDC electric motors, aerospace precision components, budding strips, cemented tungsten carbide parts, closed die forgings, coated rubber fabrics, conveyor belting, drives, ducting, gear reducers, hose (automotive, aviation, hand-built, industrial, marine and petroleum), material handling equipment (metal separators/detectors and electromagnetic lifting equipment), power transmission belts, rubber bands, rubber roll coverings and ventilation equipment (fans and blowers). For complete details on all the products available from HBD Industries, Inc. companies, visit our website at **www.hbdindustries.com.**

TABLE OF CONTENTS ..... Page(s)

Our Commitment to You 2

Choosing the Right Magnet 4

Magnet Selection Guide 5

Choosing the Right Power Equipment 6-7
- Magnet Controllers
- Magnet Generators
- DC Power Supplies

Ohio Scrap Handling Magnets
- VERS-A-LIFT 8
- POW-R-LITE 9
- LOADSTAR 10
- SUPER LOADSTAR 11
- AWX/DAWX 12
- CWX/DCWX 13
- AWL/CWL 14

Ohio Steel Mill Type
- AWL/CWL 14
- SR Series 15
- Heavy Duty Fabricated Rectangular Magnets 16
- Ohio Cast - Case Rectangular Magnets 17
- Bi-Polar Magnets 18
- Coil Handling Magnets (CL Type) 19

Ohio Duty-Cycle™ Magnet Controllers
- Model CDS 20
- Model RD-1W 20
- Models MC-1A, MC-1.5 A, MC-2 A 21
- Model RD3A 21

Auxilary Equipment
- Operator Control Switches 22
- Ohio Magnetics 250 VDC Magnet Safety Disconnect Switch 23

Ohio DC Power Supplies
- DC Power Supply Rectifiers 24-25
- Emergency Power Supplies (Battery Back Ups) 26

Ohio Duty-Cycle™ Generators
- 5 to 33 KW, 230 VDC Models 27
- Ohio Hydra – Mag Package 28
- Diesel Engine Power Package 29

Ohio Rectangular Scrap Magnets 30

Aftermarket Repair Services 31

Ohio Magnetics & Stearns Products 31



Contents

Choosing the Right Magnet



The most important criteria in selecting the magnet for your application are:

- **Type of Material to be Handled**
- **Physical and Electrical Capabilities**
- **Material Temperature**
- **Duty Cycle**

With the criteria defined, **Ohio Magnetics** can recommend lifting magnet systems that offer daily high productivity as well as many years of uninterrupted service.

Ohio Magnetics offers a complete range of products that can handle almost any ferrous metal handling application, but, let's narrow things down and answer the most often asked questions by prospective magnet users:

WHY ALUMINUM VERSUS COPPER?

Generally speaking, a lifting magnet with an aluminum wound coil is a preferable design for most applications because the price economics generally outweigh the slightly added lifting capacity of a copper-coil magnet. Although copper does exhibit more mechanical strength as compared to aluminum, **Ohio Magnetics** goes to great lengths to assure that the mechanical strength of the protective manganese bottom plate adequately shields the coil from damage.

For hot metal applications (150º C and up), invariably a copper-wound coil is used more often since the thermal properties of copper are superior to that of aluminum.

WHY A CAST MAGNET VERSUS FABRICATED?

The answer is very simply....LIFE. Ohio's cast magnet case designs offer many years of initial life as well as economic repair ability with a cast magnet case that can be repaired over and over without the worry of replacing the major components of a fabricated case. It is really quite common for the Ohio Magnetics' factory to repair cast case lifting magnets that are 30-35 years old to like new condition.

WHY CHOOSE OHIO MAGNETICS?

Because we not only consider the basic application that is presented to us for quoting. We realize that we are designing and selling powerful equipment and therefore take very seriously our obligation to provide effective and safe equipment to our customers that will not only be an economic initial purchase, but a long term value. **You have our word on it....OHIO.**





IF YOU HANDLE	REFER TO:
1. **Billets** **Blooms** **Slabs** **Plates**	Pages 16, 17, 18 ...Rectangular, Bi-Polar Magnets Page 18 ...Bi-Polar Magnets Pages 14, 15, 17 ...Cast Rectangular Magnets, SR & AWL/CWL Page 16 ...Fabricated Rectangular Magnets
2. **Coils –Eye Horizontal**	Page 18 Bi-Polar Magnets
3. **Coils –Eye Vertical**	Page 19 ...CL Magnets Page 18 ...Bi-Polar Magnets
4. **Coils- Eye Vertical & Horizontal** (either position)	Page 18 ...Bi-Polar Magnets
5. **Crop Ends**	Page 15 …SR Magnets Page 14 …AWL/CWL Magnets
6. **Grinding Balls**	Page 9 …Pow-R-Lite Magnets Page 12, 13 …WX Magnets Page 10, 11 …Loadstar & Super Loadstar Magnets
7. **Ingots** **Ingot Molds** **Drop Balls**	Page 15 …SR Magnets Page 14 …AWL/CWL Magnets
8. **Machine Workpiece Loading/Unloading**	Page 8 …Vers-A-Lift Magnets
9. **Pup Coils**	Page 9 …Pow-R-Lite Magnets Page 12, 13 …WX Magnets Page 10, 11 …Loadstar & Super Loadstar Magnets
10. **Rails** **Structurals** **Tubes** **Pipes** **Rebar**	Page 18 …Bi-Polar Magnets Page 16 …Fabricated Rectangular Magnets Page 17 …Cast Rectangular Magnets
11. **Scrap Metals**	Page 9 …Pow-R-Lite Magnets Page 10 …Loadstar Magnets Page 11 …Super Loadstar Magnets Page 12, 13 …WX Magnets Page 14 …AWL/CWL Magnets
12. **Sheets**	Page 8 …Vers-A-Lift Magnets Page 16 …Fabricated Rectangular Magnets
13. **Track Materials in Rail Maintenance-Of-Way Applications**	Page 9 …Pow-R-Lite Magnets Page 10, 11 …Loadstar & Super Loadstar Magnets Page 12, 13 …WX Magnets

Choosing the Right Power Equipment

Magnets and their related power equipment are interdependent on one another and, properly matched and maintained, work together to offer high productivity and long life. Therefore, selecting the magnet controller, generator, or DC power supply that are right for your magnet is quite important. Ohio Magnetics power equipment is all designed for the toughest applications, and therefore, can be matched to your magnet selection by simply knowing the volts, amperes, and kilowatt requirements.



MAGNET CONTROLLERS

Most magnets operate at 230 VDC which is the optimum DC voltage for magnet designs. For selecting the proper controller, you need only select a size that will accommodate the cold amperage draw of the magnet. Other voltages are available upon request from the Ohio Magnetics' factory and would be based upon the voltage and amperes specified for your magnet.

MAGNET GENERATORS

Magnet generators normally used on mobile cranes are sized in terms of output voltage and output KW. To properly size your generator, you need only know the voltage and cold KW of your magnet.

* Cold KW is calculated by multiplying Volts X cold amps.



All Ohio generators, whether belt driven or engine driven, are Class H Insulated, of drip-proof construction and are suitable for use in all environments. This makes your selection process much simpler.

*** Example: 230 Volts X 50 Cold Amps = 11,500 cold watts or 11.5 Cold KW**





DC POWER SUPPLIES (RECTIFIERS)



Similar to magnet service generators, DC Power Supplies (Rectifiers), normally used on fixed locations such as wall-mount or directly mounted to an overhead crane, are sized based upon AC Input Voltage, DC Output Voltage, and KW Output.

To select the proper DC Power Supply, you need only find your available plant power (normally 240 VAC or 480 VAC 3 PH 60HZ in the U.S.) and the voltage/cold KW requirements of the magnet.

While all NEMA 12 (IP-55) Enclosures are standard with all Ohio DC Power Supplies, NEMA 4 (IP-66), 4X (IP-66) and NEMA 3R (IP-32) options are available. It is important that you consider the environment in which you place your DC Power Supply so as to keep the unit dry and dust-free.

Also available from Ohio are a number of controls and monitoring options, such as power on/off switching both local and remote and voltage/current metering, that you may want to consider.



In addition to the basic operating equipment required in a magnet system, Ohio offers a complete line of accessories designed to provide productivity, safe operation, and easier maintenance such as:

- **Cables Reels for mobile and overhead cranes**
- **Magnets combined for use with a grapple**
- **Magnet Safety Disconnects**
- **Microprocessor – based maintenance diagnostics packages**
- **Emergency Power Systems (battery back-ups)**



VERS-A-LIFT

Powerful, easily portable models with or without built-in Rectifier*

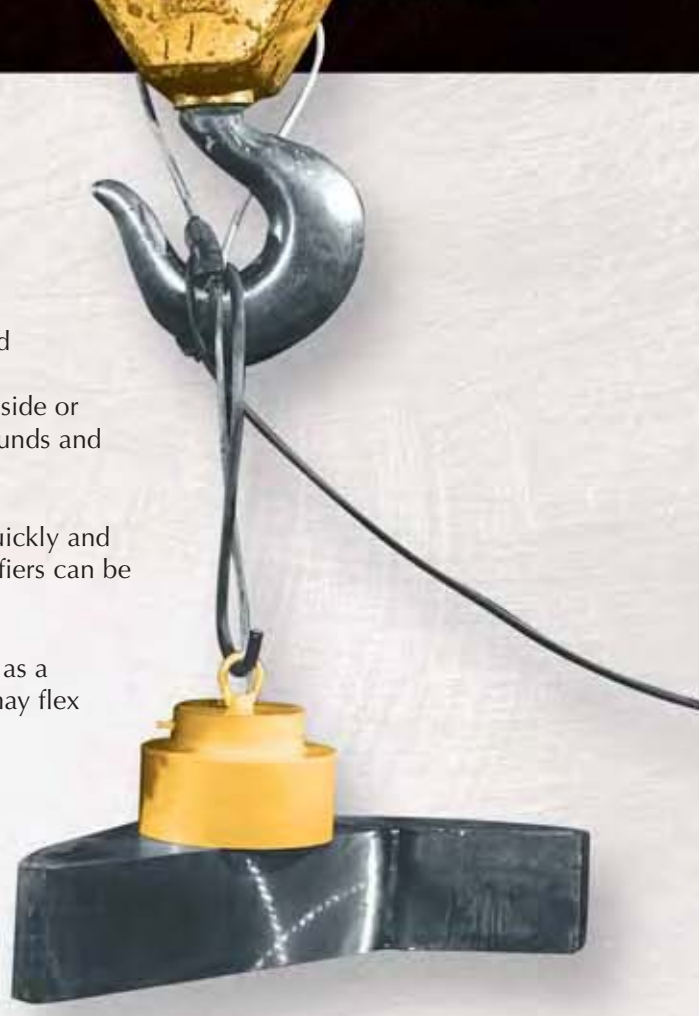

Ohio's electric **VERS-A-LIFT** magnets are powerful for their size. Designed to lift, hold and transport castings, plates, burn-outs and machined steel parts. They are easily portable and extremely maneuverable. You'll use these light weight magnets anywhere inside or outside your plant. Lifting capacities range from 350 to 6,320 pounds and are available in diameters of 4, 7, 10, 12, & 15 inches.

Ideal for use on jib cranes Ohio's **VERS-A-LIFT** magnets attach quickly and easily through a 1 inch I.D. lifting ring. Models with built in rectifiers can be plugged directly into 115 VAC wall outlets.

VERS-A-LIFT magnets are used in multiples with spreader beams as a low cost alternative for transporting thin long sheet steel which may flex or bow.

Adaptable to your power source, **VERS-A-LIFTS** are available in standard DC voltage or with built-in rectifiers. Separate rectifiers are also offered.

MODELS WITH BUILT-IN RECTIFIERS (115 V.A.C. SINGLE PHASE, 60HZ)

SIZE (Dia.)	B	C	D	E	F	G	Net Weight (Lbs.)
7"	8-11/16	4-7/16	2-1/4	1-1/2	1-1/4	3/8	38
10"	9-5/8	4-5/8	2-7/8	1-3/4	1-1/2	1/2	87
12"	10-1/8	4-3/4	2-7/8	1-3/4	1-1/2	1/2	120
15"	10	5-1/4	3-3/4	1-3/4	1-1/2	1/2	235

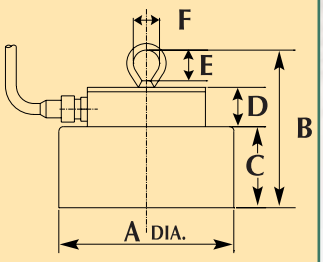

MODELS OPERATING ON STANDARD D.C. VOLTAGE [115V.D.C. EXCEPT 4" (12 V.D.C.)]

SIZE (Dia.)	A	B	C	D	E	Watts Intermittent	Net Weight (Lbs.)
4"	4	5-1/32	3-5/8	1-3/16	7/16	40	11
7"	7	5-27/32	4-7/16	1-3/16	7/16	114	34
10"	10	6-7/16	4-5/8	1-1/2	21/32	201	78
12"	12	6-9/16	4-3/4	1-1/2	21/32	261	112
15"	15	7-1/16	5-1/4	1-1/2	21/32	392	212

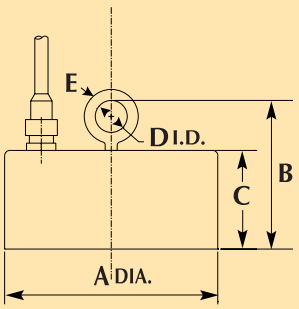

* Suitable rectifiers available on request.

PULL DATA

Size (O.D.)	4"	7"	10"	12"	15"
Max. Force (Cold) Lb. Theoretical	612	2,380	5,675	6,950	11,150
Max. Force Hot 75% Theoretical	344	1,740	3,290	3,900	6,290
Min. Plate Thickness (Zero Air Gap Direct Contact Max. Force)	3/4"	1"	1-1/4"	1-1/2"	1-3/4"

POW-R-LITE

- Lightweight ideal for scrap handling and track sweeping
- Fabricated case construction
- Aluminum or Copper wound coil designs available
- 230 VDC Standard





TECHNICAL SPECIFICATIONS						AVERAGE LIFTING CAPACITY IN POUNDS*			
Size (Dia.)	Cold Amps at 230 VDC	Required KW	Magnet Shipping Weight	Wire Size	Controller Size	Single Slab or Billet	#1 H. M.	#2 H. M.	Steel Turnings
20	4	1	350	#10	CDS	5,300	150	75	50
25	10	2.3	655	#10	CDS	7,700	300	150	100
30	16	3.7	960	#10	CDS	10,000	550	300	175
34	20	4.6	1,510	#10	CDS	13,000	845	460	270
40	30	6.9	2,030	#8	RD-1W / MC-1A	16,500	1,220	580	330
45	27	6.2	3,220	#8	RD-1W / MC-1A	40,000	2,500	1,150	675

* Material descriptions are based on specifications for Iron & Steel Scrap, published by the Institute of Scrap & Steel, Washington, D.C. Capacities are based on tests under optimum conditions. Performance will vary with specific conditions.

Loadstar

- Production scrap handling magnets
- Lightweight and ideal for hydraulic machines
- Rugged cast case construction
- Deep field aluminum wound coil
- 230 VDC standard



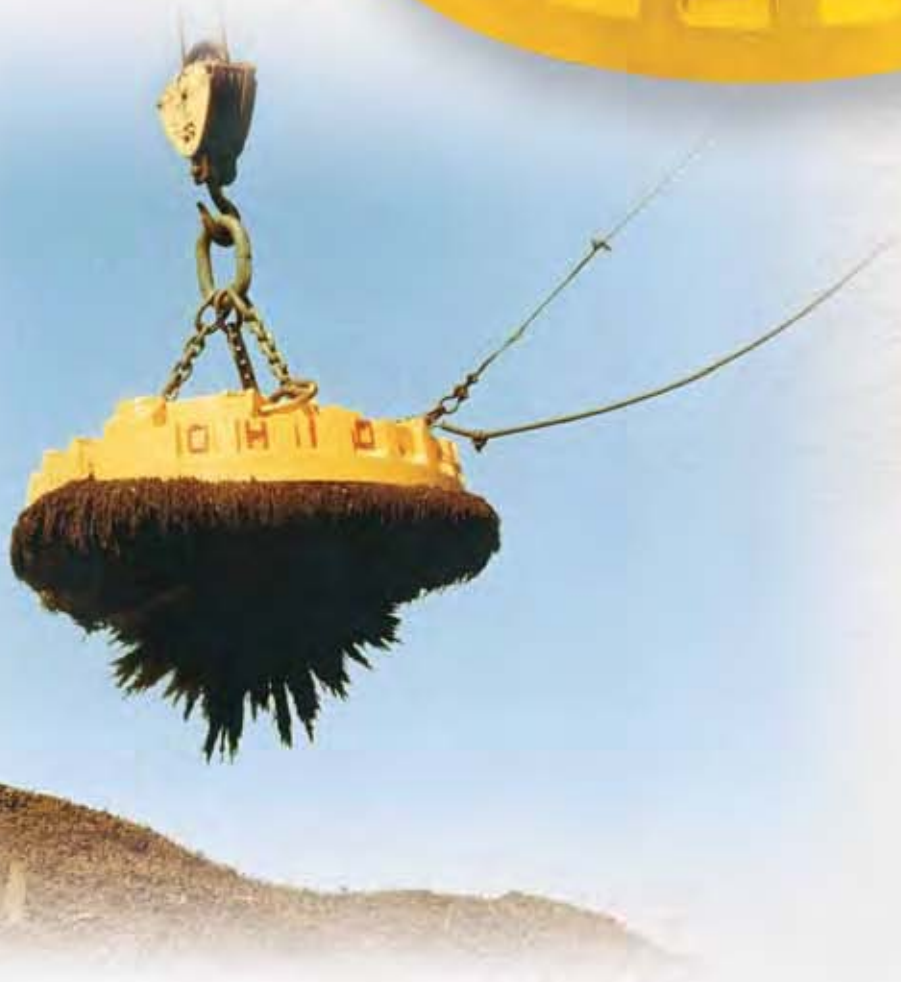

TECHNICAL SPECIFICATIONS						AVERAGE LIFTING CAPACITY IN POUNDS*		
Size (Dia.)	Cold Amps at 230 VDC	Required KW	Magnet Shipping Weight	Wire Size	Controller Size	#1 H. M.	#2 H. M.	Steel Turnings
48	40	9.3	2,900	#8	RD-1W / MC-1A	1,800	625-1,200	650
58	60	13.8	3,900	#6	RD-1W / MC-1A	2,780	800-1,800	850
67	85	19.6	5,600	#4	RD-1W / MC-1A	4,200	1,350-2,700	1,350

* Material descriptions are based on specifications for Iron & Steel Scrap, published by the Institute of Scrap & Steel, Washington, D.C. Capacities are based on tests under optimum conditions. Performance will vary with specific conditions.

Super Loadstar

- Production scrap handling magnets
- Ideal for hydraulic machines
- Heavy Duty cast case construction
- Super field aluminum wound coil
- 230 VDC Standard
- Optional extra heavy duty LS-X bottom plate is available for dense and large material applications
- Cooler operating temperatures for extended duty





TECHNICAL SPECIFICATIONS						AVERAGE LIFTING CAPACITY IN POUNDS*		
Size (Dia.)	Cold Amps at 230 VDC	Required KW	Magnet Shipping Weight	Wire Size	Controller Size	#1 H. M.	#2 H. M.	Steel Turnings
48	45	10.4	3,410	#6	RD-1W / MC-1A	2,200	750-1,470	765
58	56	12.9	4,800	#6	RD-1W / MC-1A	3,240	950-2,170	1,150
67	81	18.6	6,025	#4	RD-1W / MC-1A	4,585	1,470-3,250	1,475
72	96	22.1	8,030	#4	RD-1W / MC-1A	5,640	3,550-4,300	1,750

* Material descriptions are based on specifications for Iron & Steel Scrap, published by the Institute of Scrap & Steel, Washington, D.C. Capacities are based on tests under optimum conditions. Performance will vary with specific conditions.

AWX / DAWX

- Production scrap handling magnets for severe duty applications
- Ideal for cable or hydraulic machines
- Heavy Duty cast case construction
- AWX standard/DAWX deep field aluminum coil designs
- 230 VDC Standard





TECHNICAL SPECIFICATIONS					AVERAGE LIFTING CAPACITY IN POUNDS*			
Size (Dia.)	Cold Amps at 230 VDC	Required KW	Magnet Shipping Weight	Wire Size	Controller Size	#1 H. M.	#2 H. M.	Steel Turnings
34 AWX	18	4.2	1,150	#10	CDS	550	250-400	300
40 AWX	29	6.6	1,900	#8	RD-1W / MC-1A	900	400-600	325
45 DAWX	38	8.8	3,035	#8	RD-1W / MC-1A	1,800	570-1100	625
55 DAWX	53	12.2	3,950	#6	RD-1W / MC-1A	2,760	1650-1950	825
66 DAWX	82	18.8	6,460	#4	RD-1W / MC-1A	4,370	2600-3100	1,275
71 DAWX	99	22.7	8,290	#4	MC-1.5A	5,580	3450-4200	1,660
77 DAWX	119	27.3	10,365	#2	MC-1.5A	6,600	3900-4800	2,135
83 DAWX	149	34.2	15,340	#2	MC-2A	9,200	5350-6900	3,040
93 DAWX	173	39.8	18,800	#2	RD-3A	10,900	6400-8000	3,515

* Material descriptions are based on specifications for Iron & Steel Scrap, published by the Institute of Scrap & Steel, Washington, D.C. Capacities are based on tests under optimum conditions. Performance will vary with specific conditions.

CWX / DCWX

- Production scrap handling magnets for severe duty applications
- Ideal for cable or hydraulic machines
- Heavy Duty cast case construction
- CWX standard/DCWX deep field copper coil designs
- 230 VDC Standard



TECHNICAL SPECIFICATIONS						AVERAGE LIFTING CAPACITY IN POUNDS*		
Size (Dia.)	Cold Amps at 230 VDC	Required KW	Magnet Shipping Weight	Wire Size	Controller Size	#1 H. M.	#2 H. M.	Steel Turnings
34 CWX	20	4.6	1,450	#10	CDS	750	300-500	325
40 CWX	29	6.7	2,250	#8	RD-1W / MC-1A	950	450-650	350
45 DCWX	42	9.7	4,425	#8	RD-1W / MC-1A	1,900	625-1200	725
55 DCWX	50	11.5	5,200	#6	RD-1W / MC-1A	3,200	1900-2300	1,125
66 DCWX	78	17.9	8,750	#4	RD-1W / MC-1A	5,200	2700-3300	1,700
71 DCWX	92	21.2	11,150	#4	MC-1.5A	6,015	3850-4400	1,925
77 DCWX	100	23	12,700	#2	MC-1.5A	6,790	4100-5100	2,200
83 DCWX	181	41.6	17,250	#2	RD-3A	9,580	5650-7300	3,130
93 DCWX	188	43.2	20,100	#2	RD-3A	11,950	7000-9000	3,700

* Material descriptions are based on specifications for Iron & Steel Scrap, published by the Institute of Scrap & Steel, Washington, D.C. Capacities are based on tests under optimum conditions. Performance will vary with specific conditions.

AWL / CWL Series

- Production scrap and Mill Duty magnets
- Product Applications include:
  - Scrap Handling
  - Slag Reclamation
  - Drop Ball Handling
  - Ingots Handling
  - Crop End Handling
  - Mold Handling
- Heavy Duty cast case construction
- AWL (aluminum)/CWL (copper) coil designs
- 230 VDC standard, special voltages available
- Hotwork designs available on request





TECHNICAL SPECIFICATIONS (Aluminum Wound Coils)						AVERAGE LIFTING CAPACITY IN POUNDS*		
Size (Dia.)	Cold Amps at 230 VDC	Required KW	Magnet Shipping Weight	Wire Size	Controller Size	#1 H. M.	#2 H. M.	Steel Turnings
47 AWL	40	9.3	3,250	#8	RD-1W / MC-1A	1,900	600-1100	650
57 AWL	54	12.5	5,650	#6	RD-1W / MC-1A	3,000	750-1600	1,000
61 AWL	74	17	6,900	#4	RD-1W / MC-1A	3,900	1100-2000	1,300
66 AWL	76	17.4	7,650	#4	RD-1W / MC-1A	4,450	2800-3300	1,500
72 AWL	103	23.6	10,250	#4	MC-1.5A	5,700	3500-4300	2,250
76 DAWL	123	28.4	15,700	#2	MC-1.5A	7,750	4700-6000	2,450
83 DAWL	139	32.1	19,300	#2	MC-2A	9,000	5500-7000	2,850
93 DAWL	151	34.7	23,400	#2	MC-2A	11,400	7000-8700	4,100

* Material descriptions are based on specifications for Iron & Steel Scrap, published by the Institute of Scrap & Steel, Washington, D.C. Capacities are based on tests under optimum conditions. Performance will vary with specific conditions.

SR Series

- Designed specifically for severe Mill Service Applications
- Product Applications include
  - Slag Reclamation
  - Drop Ball Handling
  - Slab Handling
  - Crop End Handling
  - Ingots Handling
  - Mold Handling
- Extra Heavy Duty cast case construction
- Available in aluminum or copper coil designs
- Available in standard, deep and extra deep field designs
- 230 VDC standard, special voltages available
- Hotwork and Special designs available on request



TECHNICAL SPECIFICATIONS — **AVERAGE LIFTING CAPACITY IN POUNDS***

Size (Dia.)	Cold Amps at 230 VDC	Required KW	Magnet Shipping Weight	Wire Size	Controller Size	#1 H.M.	Billet or Slab	Drop Ball
40 SRDC	29	6.6	2,550	#8	RD-1W / MC-1A	1,300	27,600	12,000
47 SRDA	38	8.8	3,600	#8	RD-1W / MC-1A	1,900	33,400	16,000
47 SRDC	42	9.7	3,900	#8	RD-1W / MC-1A	2,000	33,400	17,000
57 SRDA	65	14.8	6,800	#6	RD-1W / MC-1A	3,200	56,500	22,000
57 SRDC	71	16.4	7,200	#6	RD-1W / MC-1A	3,400	56,500	25,000
65 SRDA	74	17.1	11,400	#4	RD-1W / MC-1A	4,800	71,200	35,000
65 SRDC	69	15.9	12,800	#4	RD-1W / MC-1A	4,800	71,200	35,000
69 SRDC	84	19.4	18,000	#4	RD-1W / MC-1A	6,500	84,500	45,000

* Material descriptions are based on specifications for Iron & Steel Scrap, published by the Institute of Scrap & Steel, Washington, D.C. Capacities are based on tests under optimum conditions. Performance will vary with specific conditions.

Heavy Duty Fabricated Rectangular Magnets

- Custom designed for your specific applications in the handling of:
  - Sheets and plates
  - Billets, bundles and bars
  - Structural products
- Heavy Duty fabricated case design
- Available in aluminum or copper coil designs
- 230 VDC standard, special voltages available
- Hotwork designs available
- Energy efficient design



STEEL PLATE LIFTING DATA

	Longest Plate in Feet for One Magnet		Maximum No. of Plates Per Lift		Plate Area in Square Feet Magnet Size (in inches) A- Single Plate Lift B- Multiple Plate Lift															
Plate Thickness (in inches)	Magnet Series				9 x 20		9 x 40		9 x 60		9 x 80		9 x 100		16 x 20		16 x 40		16 x 60		16 x 80		16 x 100	
	9"	16"	9"	16"	A	B	A	B	A	B	A	B	A	B	A	B	A	B	A	B	A	B	A	B
.015	2.4	3.9	27	60	7	4	13	9	20	13	26	18	33	22	13	12	26	24	38	36	51	48	64	61
.031	3.3	5.5	13	30	9	6	19	13	28	19	37	26	47	32	19	16	36	31	54	47	72	62	91	78
.062	4.5	8.0	7	16	13	9	26	19	39	28	52	38	66	47	26	20	51	39	77	59	102	79	128	99
.125	6.5	10.8	4	9	19	14	37	28	56	41	74	55	93	69	36	25	72	50	109	75	145	100	181	125
.187	7.0	13.0	3	7	23	18	45	35	68	53	91	70	114	88	45	28	90	56	135	84	180	112	225	140
.25	9.0	15.5	3	5	26	20	53	40	79	61	105	81	131	101	52	29	104	58	156	88	208	117	260	146
.375	11.0	19.0	2	4	32	26	64	52	97	78	129	104	161	130	63	32	126	64	189	96	252	128	315	160
.50	13.0	22.0	1	3	32		74		112		149		186		73	33	146	66	219	100	292	133	365	166
.75	16.0	27.0	1	2	46		91		137		182		228		89	36	178	71	267	107	356	143	449	178
1.00	18.0	31.0	1	1	53		105		158		210		263		103		206		308		410		513	

CONSULT FACTORY WITH YOUR SPECIFIC APPLICATION REQIREMENTS.

Heavy Duty Cast Case Rectangular Magnets

- Designed specifically for the most severe mill applications including:
  - Slab turning and Hot slab handling
  - Hot billet and boom handling
  - Hot structural material handling
- Heavy Duty cast case construction
- Copper coil designs
- 230 VDC standard, special voltages available



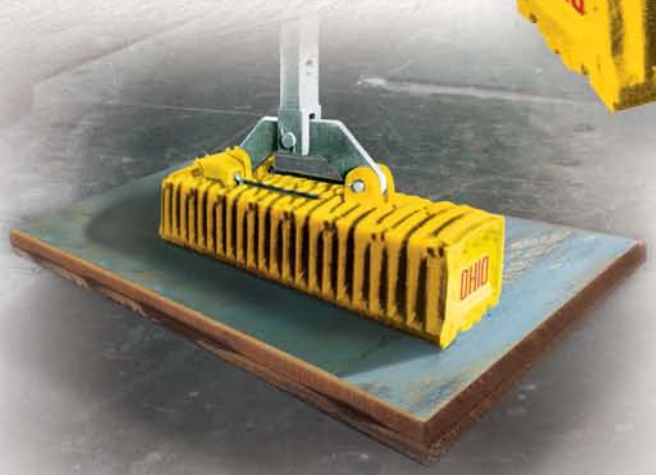

TECHNICAL SPECIFICATIONS*

Magnet Size	Magnet Weight	Cold Amps	Cold Watts	Controller Size	Wire Size	Lifting Capacity (in pounds)*
19 x 32	950	8	1,850	CDS	#14	7,000
19 x 42	1,550	12	2,700	CDS	#14	12,000
19 x 52	1,700	13	3,000	CDS	#14	15,000
19 x 73	2,850	15	3,500	CDS	#14	28,000
20 x 66	3,000	19	4,500	CDS	#12	25,000
21 x 85	3,850	25	5,800	RD-1W/MC-1A	#12	32,000
21 x 108	4,500	35	8,050	RD-1W/MC-1A	#10	40,000
26 x 42	3,000	21	4,900	RD-1W/MC-1A	#12	18,000
26 x 54	4,500	30	6,900	RD-1W/MC-1A	#10	25,000
26 x 62	4,800	30	6,900	RD-1W/MC-1A	#10	30,000
26 x 68	5,900	37	8,500	RD-1W/MC-1A	#10	35,000
28 x 74	6,850	40	9,700	RD-1W/MC-1A	#10	47,000
30 x 48	4,500	23	5,400	RD-1W/MC-1A	#10	22,000

* Material lifted must cover the magnet face and be a minimum of 2" thick. Extremely rough, long or wide pieces must be de-rated. Lifting capabilites shown are for magnets in the HOT operating condition.

Bi-polar Magnets

Standard and Special Ohio Bi-Polar Magnet Designs and Options

Available in various standard widths: 8", 12", 13", 19" and 22", this model is also available in special widths to meet any application. Renewable or auxiliary pole shoes can be supplied for all sizes. Shoes convert standard magnets for special handling and then reconvert to regular magnets quickly and easily for routine material handling.





Design Advantages

A unique advantage of the Ohio Bi-Polar magnets is their capability to handle higher temperature material when compared to standard rectangular magnets. One reason is that the coil is positioned higher in the magnet design and farther away from the hot material load. Another is, there are fewer square inches of magnet pole area which come into contact with the hot material on a Bi-Polar magnet design. As a result, less heat is transferred from the hot material to the magnet allowing it to retain a greater percentage of its lifting ability on high temperature loads.

- **The most versatile magnet design for mill applications such as:**
  - **Plates**
  - **Billets (hot and cold)**
  - **Coils (eye vertical and horizontal)**
  - **Structurals**
  - **Bundles**
  - **Rebar**
  - **Rails**
  - **Tubes and pipes**
- **Low power consumption**
- **230 VDC Standard with special voltages available on request**
- **Custom designed pole shoes for radial or irregular shapes**
- **Hotwork designs readily available**

PULL DATA		
Width	**Plate Size**	**#/in. of length**
8"	**1-1/2"**	**320**
12"	**2-1/2"**	**450**
13"	**3"**	**515**
19"	**3-3/4"**	**940**
22"	**5"**	**1,010**

* Working Pulls@230Volts D.C. under ideal conditions. Above capacities based upon clean, smooth flat, low carbon steel plate. Derate according to safety factor required. Derate for thinner plate.

- **Heavy duty magnet construction**
- **Specifically designed internal construction, the correct balance of wire to steel, develops maximum flux density for heavy-duty lifting with minimum power consumption**
- **100% lifting area with a uniform field across the full length of the unit**
- **Pole lengths from 24" to 100" or to any special length you require**

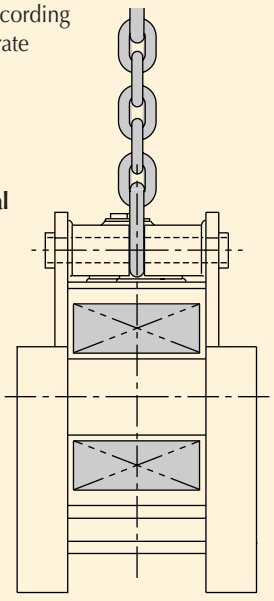

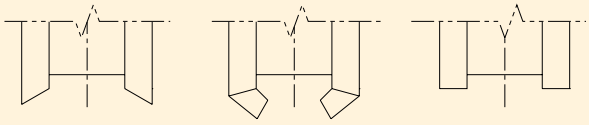

Tampered poles for bundles, coils and structurals

Removable poles and angles and tubes

Flat poles for sheet and tubes

Coil Handling Magnets

CL Type

- Custom designed for the handling of specific size coils in the eye vertical position
- Designs available for handling coils up to 55 Tons
- Heavy duty cast steel top plate
- 230 VDC standard, special voltages available

Data Required for Design Specification and Proposal

1. Coil O.D. and I.D.
2. Coil length(maximum and minimum)
3. Maximum coil weight
4. Maximum edge stagger
5. Banding specification
6. Crane capacity
7. Coating and covering (if applicable)
8. Duty Cycle



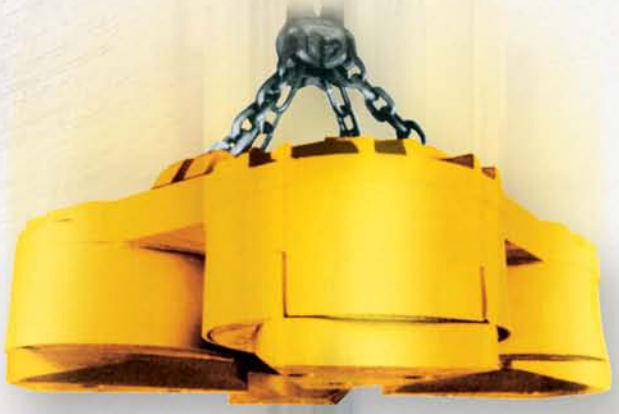





Ohio Duty Cycle Magnet Controllers

GENERAL INFORMATION

Automatic Drop

OHIO Controllers are standard with this feature. One movement of the master lever control switch or pushbutton to the Drop position and the controller will automatically sense the exact amount of reverse current required to drop the load off the magnet. Once the magnet is clean of ferrous metal another operation may begin.

Manual Drop

OHIO Controllers are available in an optional manually controlled version. This allows the operator to precisely control the length of time required to fully clean the magnet of ferrous metal by holding the lever or pushbutton in the Drop position. Once the magnet is clean of ferrous metal another operation may begin. This feature is used when the dribbling of scrap is desired by moving the master lever switch to the OFF position. This allows the magnetism to slowly dissipate through the discharge resistors. When the operator desires to fully release the load, simply move the switch to the Drop position and hold it there until the magnet is clean. The master lever switch will automatically return to the OFF position when manually released.

CDS — DIM: mm / [inch]

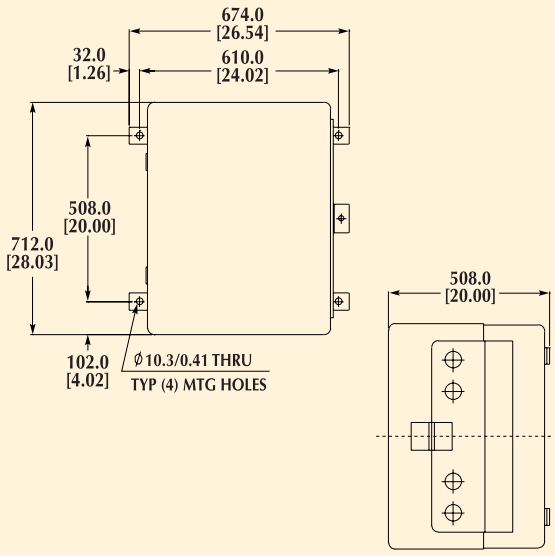

Mounting Position

All OHIO Controllers are to be wall mounted in the vertical "UP" position. Standard enclosures are NOT weather proof. Select a location which avoids excessive moisture, oil and dirt.

Model CDS

- **Operating range 5 - 20 amps DC (automatic drop model)**
- **Operating range 1 - 20 amps DC (manual drop model)**
- **230 VDC standard, 115 VDC available upon request**
- **Mechanical interlock prevents overheating**

Model RD-1W

- **Wide operating range of 20 - 100 amps DC**
- **Small enclosure dimensions**
- **Adjustable drop potentiometer**
- **230 VDC standard, 115 VDC available upon request**

RD-1W CONTROLLER — DIM: mm / [inch]

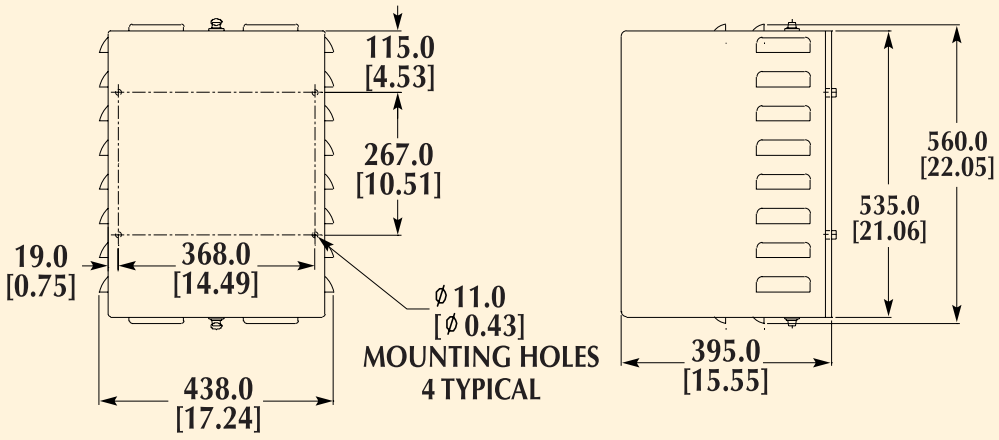

370 mm / 14.5 in CLEARANCE NEEDED FOR COVER REMOVAL

Ohio Duty Cycle Magnet Controllers

GENERAL INFORMATION



Model MC-1A

- Wide operating range of 20 - 100 amps DC
- Adjustable drop potentiometer
- 230 VDC standard, 115VDC available upon request
- Mechanical interlock prevents resistor overheating
- Separate resistor bank compartment prevents damage to front wiring and components

Model MC-1.5A

- Wide operating range of 65 - 130 amps DC
- Adjustable drop rheostat
- 230 VDC standard, 115VDC available upon request
- Mechanical interlock prevents resistor overheating
- Separate resistor bank compartment prevents damage to front wiring and components

Model MC-2A

- Operating range of 100 - 150 amps DC
- Adjustable drop rheostat
- Mechanical interlock prevents resistor overheating
- Separate resistor bank compartment prevents damage to front wiring and components

Model RD-3A

- Operating range of 100 - 200 amps DC
- Adjustable drop timer relays
- 230 VDC standard, 115VDC available upon request
- Mechanical interlock prevents resistor overheating
- Separate resistor bank enclosure

MC-1A, MC-1.5A, MC-2A DIM: mm / [inch]

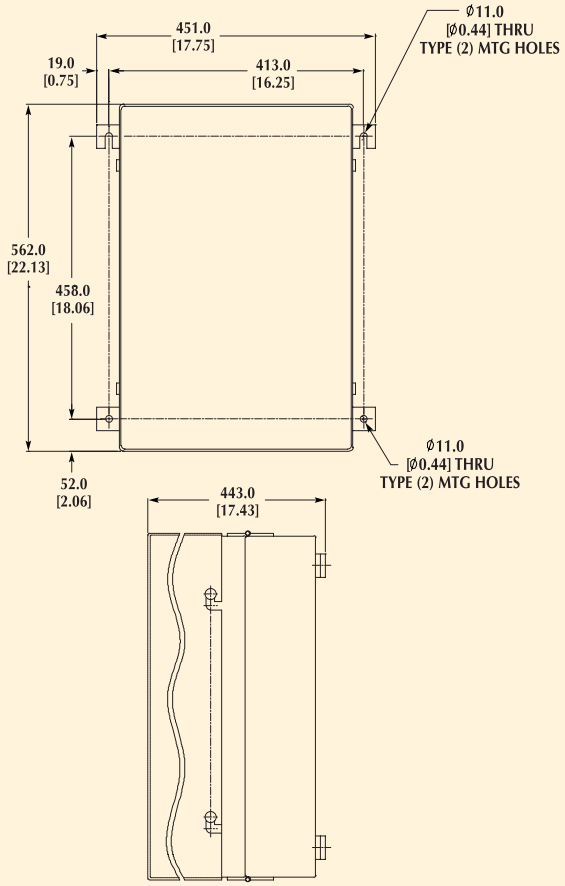

RD-3A CONTROLLER DIM: mm / [inch]

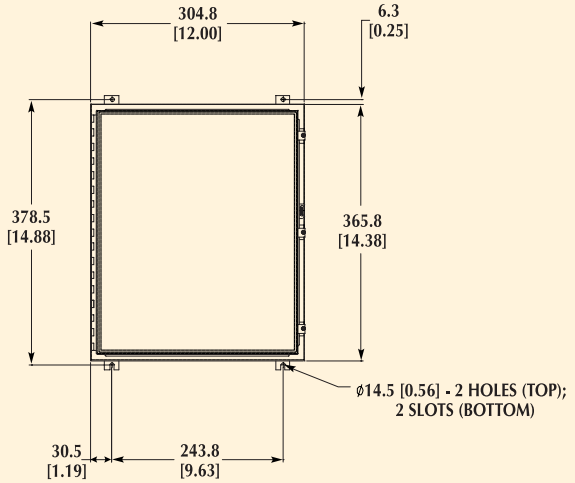

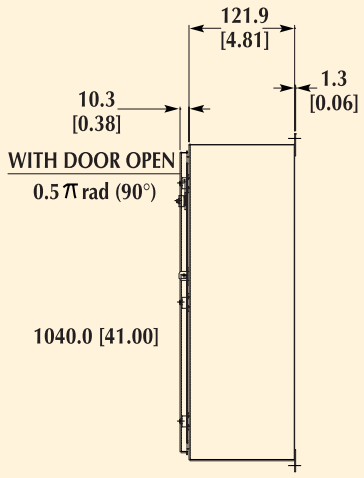

Operator Control Switches

PUSH BUTTON TYPE – Part No. 091M2266A — DIM: mm / [inch]

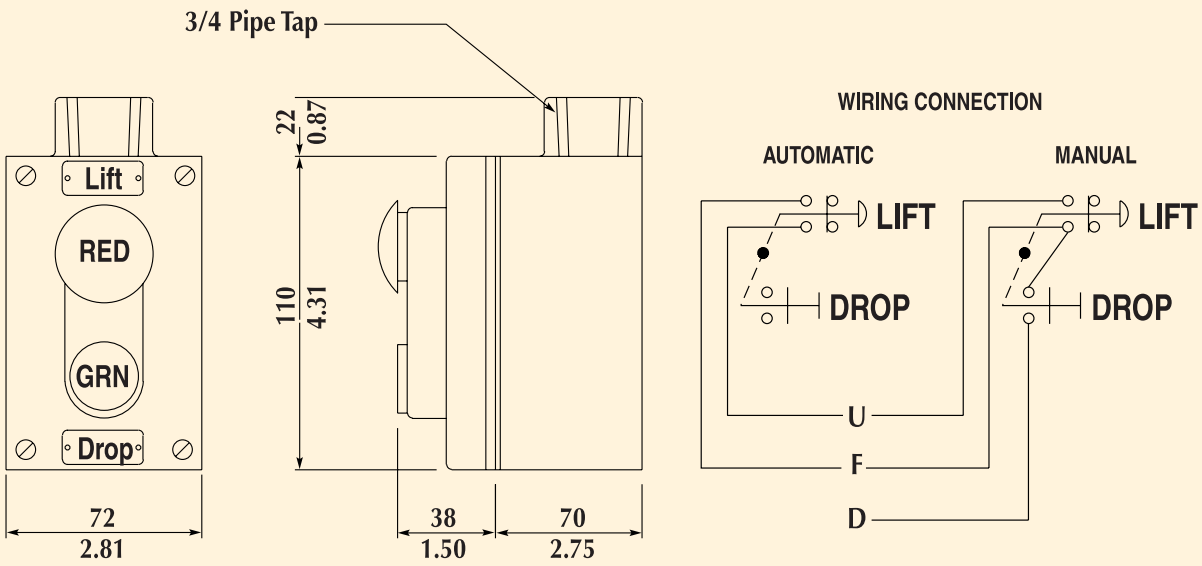

STANDARD LEVER TYPE – Part No. 1300C0150000 — DIM: mm / [inch]

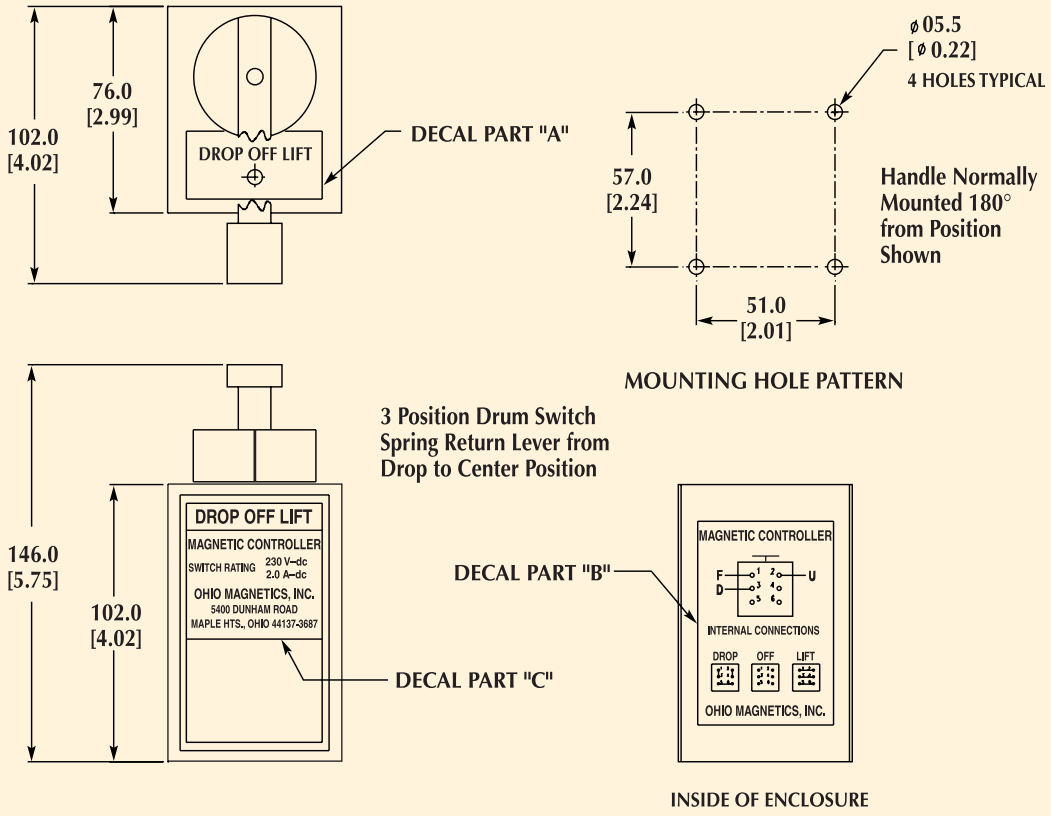

250VDC Magnet Safety Disconnect Switch



Standard Features:

- Manually operated
- Automatic discharge of magnet power
- Mechanical interlock (door must be closed to operate)
- NEMA 3R/12 (IP-55) combination enclosure
- Provides operator safety

Magnet circuits, which are highly inductive, occasionally require disconnection while the magnet is energized. Standard knife or safety switches are not capable of breaking this highly inductive magnet energy.

Ohio Magnetics' magnet disconnect switch interrupts the magnet circuit by using a quick break switch with a permanently connected power diode and power resistor* across negative and positive of the switch output. The power diode directs the discharge current from the negative to positive while blocking the normal currents from positive to negative. The power resistor* dissipates the stored energy of the inductive magnet circuit. The switch is polarity sensitive.Input and output power leads must be connected as indicated by markings.

* 30 A and 60 A switches do not require power resistor.

TECHNICAL SPECIFICATIONS

Voltages	Amp Rating Max.	Part No.
250 VDC	30	018C8500A
250 VDC	60	018C8600A
250 VDC	100	018C8700A
250VDC	200	018C8800A

ELEMENTARY DIAGRAM*

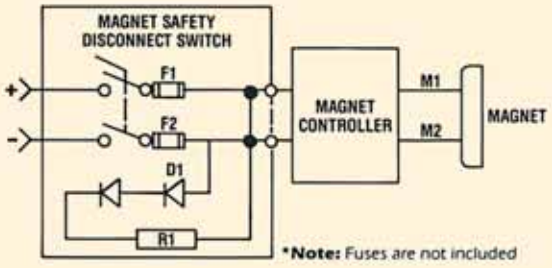

DIMENSION INFORMATION

DIM: mm / [inch]

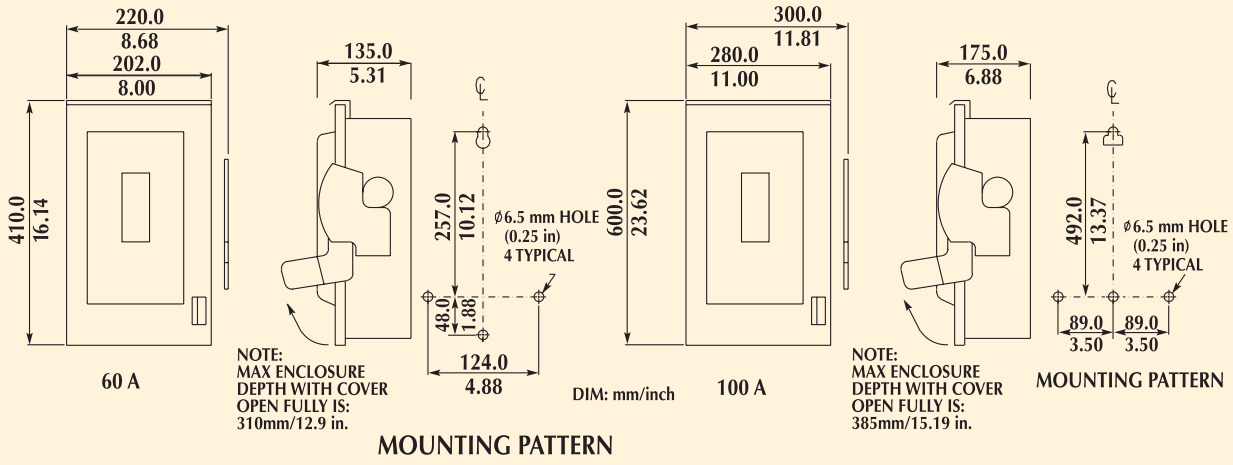

Ohio Silicon Rectifiers

Ohio Magnetics' DC Power Supplies for lifting magnets are available in both a fixed voltage output (usually 230 VDC or 115 VDC) and a variable output (usually 0-230 VDC or 0-300 VDC).

Fixed voltage output type DC Power Supplies are used in most general magnet applications. Variable voltage supplies are used in applications of fanning, boost/carry, flux reduction, constant flux regulation, etc. Voltage outputs can be set via potentiometers for voltage limit-current regulation or current limit-voltage regulation.

Because the cold current of the magnet is 30% to 50% greater than the operating current, the power supply must be sized for the cold rating of the magnet at 25° C.



Standard Features

- **NEMA 12 (IP-55) enclosure natural convention**
- **North American or international input voltages; 3 phase; 50 or 60 Hz**
- **480 V or 240 VAC input voltage, 3 phase, 60Hz**
- **Magnetic line starter with 3-phase overload relay protection**
- **Adjustable taps on power transformers to match input line conditions**
- **Fast acting fuse protection for diode bridge**
- **Transient surge protection**
- **DC output fuses for short circuit protection**
- **AC power on indicator light (neon)**
- **Wall mounted enclosures to 10 KW, floor mounted enclosures above 10 KW**
- **110/120 V (North America) or 220/240 (international) control voltage for input switching and operation of accessories**
- **120 VAC control for input power switching**
- **Input and output power terminal blocks**
- **230 V or 115 VDC output voltage (115 VDC output only to 25 KW)**
- **Modular diodes/scr's for easy replacement**
- **Convection cooled up to 6.5 KW (230 V) or 4 KW (115V); Fan cooled above 6.5 KW (230 V) or 4 KW (115 V)**
- **Separate 230 V supply for controllers on all variable voltage supplies**

MAGNET DC POWER SUPPLY SPECIFICATIONS	
Full Load Efficiency	90-96%
Power Factor	92-95%
Voltage Regulation	6% or less
Full Wave Output Ripple	4.6%
Power Ratings	100% Continuous
@60° C Ambient	125% 2 Hours

Ohio Silicon Rectifiers

GENERAL INFORMATION

For Pricing Information, please supply:

1. Input voltage and frequency
2. Input line equipment desired(see options)
3. DC output voltage
4. Magnet cold current @ 25° C
5. Enclosure IEC 529 style or NEMA 12 (IP-55) Standard
6. Additional options
7. Quantity of units required

NOTE: Service, parts replacement and rebuilding are available on existing equipment. Call for cost saving details.

Optional Features

- IP32, IP66, enclosures natural convection*
- Latch lock on enclosures where possible
- 3 wire pushbutton on/off control or 2 wire selector switch type on /off control both local or remote package
- Remote meter package on all ratings, local meter package only on IP 32, IP-55
- DC output indicator light on either local or remote package
- Circuit breaker disconnect (local or remote)
- Variable voltage:
  - 0-230 V system for flux reduction, fanning, current/voltage regulation applications
  - 0-300 V systems for boost /carry, current/voltage regulation applications
- Power relay for operation of controller lift/drop coil from 110/120 (North America) or 220/240 (international) via pendant control
- Special requests available: please contact factory
  - NEMA 3R - IP32
  - NEMA 12 - IP55
  - NEMA 4 - IP66
  - NEMA 4X - IP66

DC POWER SUPPLY DATA FOR FIXED AND VARIABLE DC POWER SUPPLIES*

KW	Amps @ 230 V	Amps @ 115 V	Enclosure Size H x W x D (in/mm)	Weight/Mass (lb/kg)
2	8.7	16.6	36 x 30 x 12 915 x 760 x 305	238/110
4	17.2	33.3	36 x 30 x 12 915 x 760 x 305	265/120
6.5	28.0	54.2	36 x 30 x 12 915 x 760 x 305	310/140
10	43.1	83.3	36 x 30 x 12 915 x 760 x 305	355/160
15	64.7	125.0	48 x 36 x 16 1220 x 915 x 405	545/250
20	86.2	166.6	48 x 36 x 16 1220 x 915 x 405	595/270
25	109.0	208.0	48 x 36 x 16 1220 x 915 x 405	640/290
35	151.0	N/A	60 x 36 x 20 1525 x 915 x 510	800/360
45	194.0	N/A	60 x 36 x 20 1525 x 915 x 510	875/400
55	237.0	N/A	60 x 36 x 20 1525 x 915 x 510	950/430
65	283.0	N/A	60 x 48 x 24 1525 x 1220 x 610	1060/480
75	326.0	N/A	60 x 48 x 24 525 x 1220 x 610	1100/500
87.5	380.0	N/A	60 x 48 x 24 1525 x 1220 x 610	1145/520
100	435.0	N/A	60 x 48 x 24 1525 x 1220 x 610	1255/570

* Add 12 in. –305mm to height for leg kit on floor mount models.

Emergency Power Supplies [Battery Back-Ups]

For 230 VDC Lifting Magnets on-Line Type

Ohio Magnetics' on-line type emergency power supplies provide immediate battery power to 230 VDC lifting magnets that will safely hold loads in the event of a power failure for your specified period of time.

Available for 2 KW to 100 KW Magnet systems, OHIO EPS power supply also provides instant warnings that the magnet system is operating on battery power in both audible and visual displays

Standard Features:

- 5, 10,15,20,30, 45 and 60 minute holding times
- Lead Acid industrial batteries in a separate enclosure
- Batteries charge from main power rectifier
- Instant transfer of power to load
- Battery disconnect switch with fault sensing
- IP-55 enclosures
- Cab mounted operator's display with alarm horn and visual operation indicating lamps
- 180 VDC end voltage

Optional Features:

- Nickel – cadmium batteries
- Charging/discharging ammeter
- Off-line charging system
- Special indicating features: alarms, lamps, meters
- 115 VDC system voltage
- Battery enclosure heaters

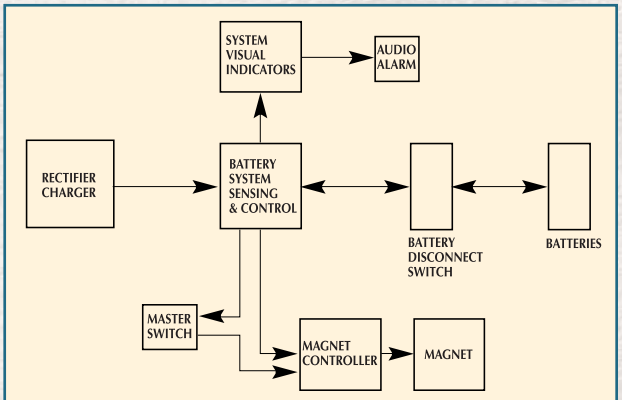

USA/CANADA	
230, 240, 250 V 400, 470, 480, 490, 500 V	} 60 Hz
INTERNATIONAL	
200, 220, 240 V 400,420, 440, 460, 480 V	} 50/60 Hz
380, 400/415 V 500/575/600 V	} 50/60 Hz 60 Hz

For pricing, please supply:

- Magnet Voltage (DC)
- Cold Magnet Current
- Material being handled
- Ambient conditions
- Standard input voltages and frequency
- Indoor/outdoor operation
- Battery-type preference
- Hold-time required
- A.C. input voltage and line frequency



OPTH Power Take-off Generators

5 to 33 KW, 230 VDC Models

Designed for Belt or Hydraulic Motor Drive

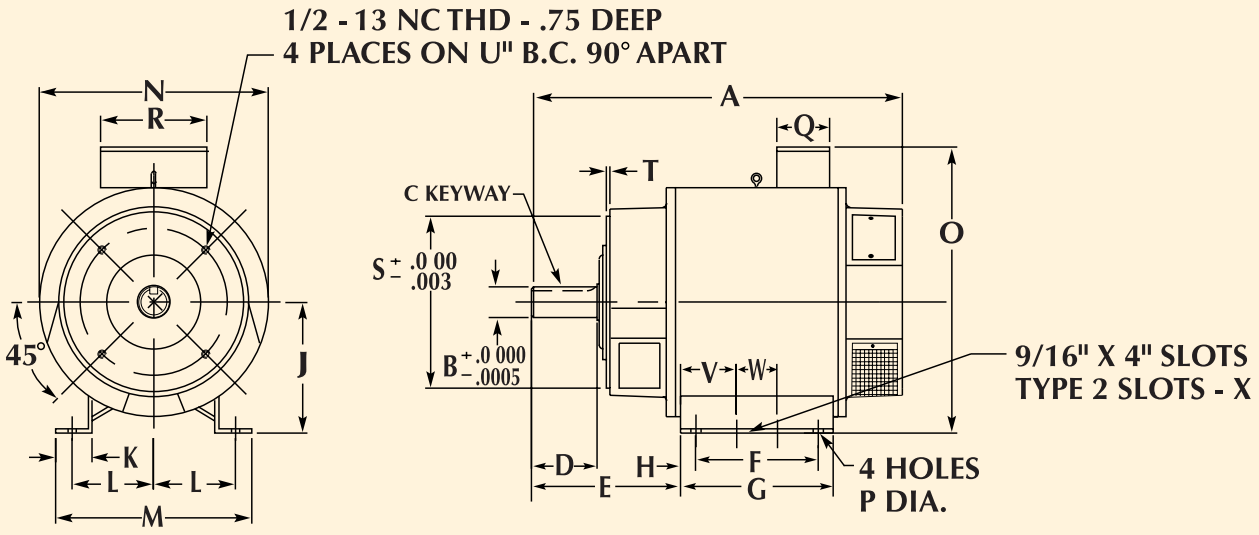

TECHNICAL SPECIFICATIONS - Dimensions (inches)*

Model	KW	RPM	A	B	C	D	E	F	G	H	J	K	L	M	N	O	P	Q	R	S	T	U	V	W	X	Approx. Weight/ Lbs.
OPTH5-25	5	2,500	16 1/2	1	1/4 x 1/8	2 1/4	N/A	7 7/16	N/A	N/A	6 19/32	N/A	3 5/8	8 1/4	10 3/4	16	17/32	4 1/4	4 1/4	10 1/2	1/4	9	OMIT	OMIT	OMIT	170
OPTH10-25	10	2,500	19 7/8	1 1/4	1/4 x 1/8	3 1/2	7 1/16	5 1/2	7	3/4	6 3/4	2	4 1/2	10 1/8	12	15 9/16	3/16	4 1/4	4 1/4	8 1/2	1/4	7 1/4	OMIT	OMIT	OMIT	175
OPTH15-18	15	1,800	24 3/8	1 5/8	3/8 x 3/16	4	8 13/16	4 1/2	10	3/4	8	2 1/2	5 1/2	12 3/4	14	18 3/16	9/16	4 1/4	4 1/4	10 1/2	1/4	9	3 1/4	3 1/2	SLOT	290
OPTH20-18	20	1,800	26 3/8	1 5/8	3/8 x 3/16	4	8 13/16	6	10	3/4	8	2 1/2	5 1/2	12 3/4	14	18 3/16	9/16	4 1/2	6 1/2	10 1/2	1/4	9	3 1/4	3 1/2	SLOT	345
OPTH25-18	25	1,800	28 3/8	1 5/8	1/2 x 1/4	4	8 13/16	6	10	3/4	8	2 1/2	5 1/2	12 3/4	14	18 3/16	9/16	4 1/2	6 1/2	10 1/2	1/4	9	3 1/4	3 1/2	SLOT	410
OPTH33-18	33	1,800	31 11/16	2	1/2 x 1/4	5	10 3/4	11	13	1	8 1/2	3	6 1/2	14 3/4	15 3/4	20 1/2	11/16	4 1/2	6 1/2	12 1/2	3/8	11*	3 1/4	3 1/2	SLOT	570

* 5/8 - 11 NC THD– .875" DEEP

Ammeter, Voltmeter, Slide Resistors in Separate Enclosure

- Required for use with all Ohio Generators
- Hydraulic components available
- Contact Ohio Magnetics for application information

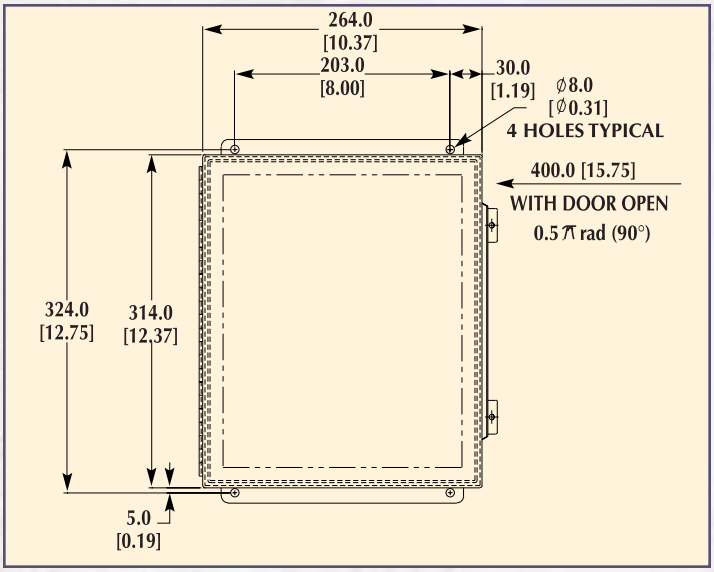

Hydra-Mag Package

Standard Features

- Available in sizes: 5 KW - 25 KW
- Self contained & frame mounted
- Includes all hydraulic controls with integrated single manifold
- Complete with all magnet controls
- Operates on 12 or 24 VDC
- Ready to mount and operate on delivery



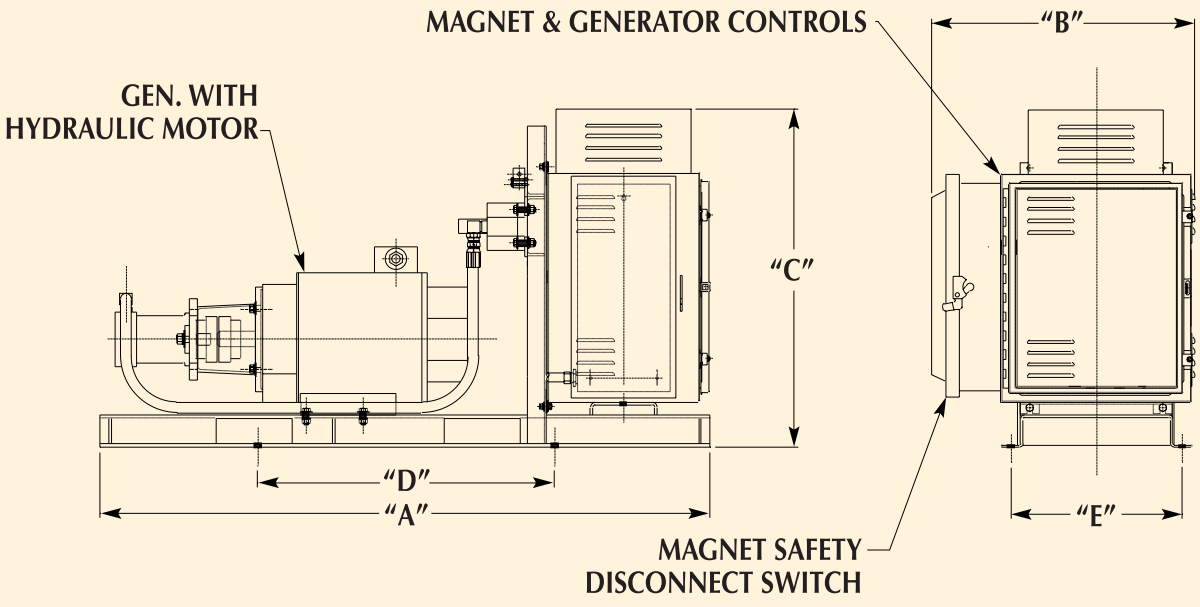

TECHNICAL SPECIFICATIONS

Generator Size	Dimensions (in inches)					Disconnect Size	Controller Size	Required Pressure & Flow from Pump*	Shipping Weight
	A	B	C	D	E				
5 KW	43.00	28.75	28.75	20.94	18.00	30 Amp	CDS	12 GPM @ 2368 PSI	450
10 KW	50.69	24.50	34.14	31.00	14.00	60 Amp	MC-1A	31 GPM @ 1338 PSI	575
15 KW	60.25	27.62	35.63	29.25	18.00	100 Amp	MC-1A	32 GPM @ 1803 PSI	725
20 KW	62.25	27.62	36.63	31.25	18.00	100 Amp	MC-1A	32 GPM @ 2304 PSI	775
25 KW	64.25	27.62	35.63	33.25	18.00	200 Amp	MC-1.5A	32 GPM @ 2805 PSI	875

* Ohio Magnetics recommends the use of a dedicated pump with these units to maintain the proper pressure and flow requirements throughout your excavator.

Diesel Engine Power Package

Standard Features

- Available in sizes: 5 KW - 33 KW
- Self contained & frame mounted
- Operates on 12 VDC
- Available with or without all magnet controls
- Ready to mount and operate on delivery
- Also available with gasoline driven engine in select sizes

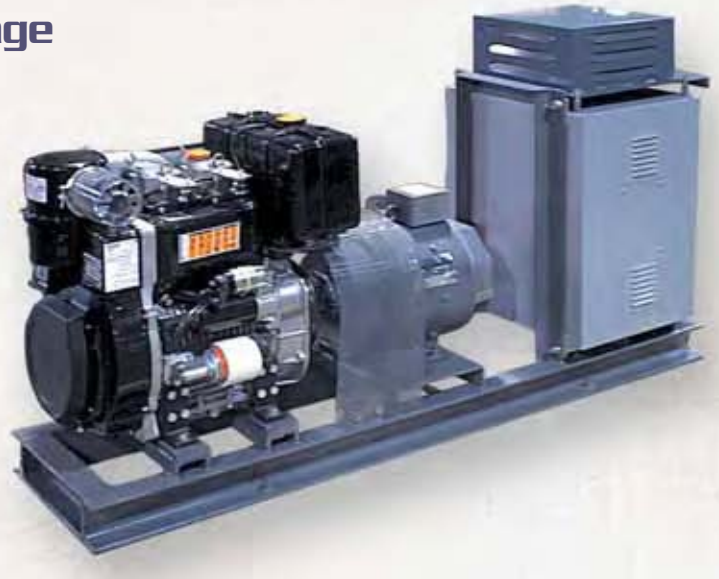





TECHNICAL SPECIFICATIONS (No Magnet Controls)

Generator Size	Dimensions (in inches)					Hole (dia.)	Controller Size	Disconnect Size	Unit Weight
	A	B	C	D	E	F			
5 KW	37.31	20.50	23.00	26.50	12.50	0.69	N/A	N/A	525
10 KW	50.25	23.50	35.00	42.00	14.63	0.69	N/A	N/A	800
15 KW	60.00	26.50	38.50	48.50	14.63	0.69	N/A	N/A	1,150
20 KW	60.00	26.50	38.50	48.50	14.63	0.69	N/A	N/A	1,200
25 KW	60.00	26.50	38.50	48.50	14.63	0.69	N/A	N/A	1,275
33 KW	72.00	26.50	39.00	48.50	14.63	0.69	N/A	N/A	1,400

TECHNICAL SPECIFICATIONS (with Magnet Controls)

Generator Size	Dimensions (in inches)					Hole (dia.)	Controller Size	Disconnect Size	Unit Weight
	A	B	C	D	E	F			
5 KW	50.25	28.75	32.13	30.25	14.44	0.81	CDS	30 Amp	750
10 KW	70.00	24.00	39.00	53.00	17.00	0.75	MC-1A	60 Amp	1,025
15 KW	81.00	27.38	39.50	61.00	17.00	0.81	MC-1A	100 Amp	1,375
20 KW	81.00	27.38	39.50	61.00	17.00	0.81	MC-1A	100 Amp	1,425
25 KW	88.63	27.38	39.50	64.00	17.00	0.81	MC-1.5A	200 Amp	1,500
33 KW	92.63	28.38	40.50	68.00	17.00	0.81	MC-2A	200 Amp	1,625

Ohio Rectangular Scrap Magnets

Standard Features

- Heavy duty fabricated case
- Ideal for the loading and unloading of rail cars
- Optimum magnet for scrap charging
- Deep field dual coil design for lower inductance which decreases charging and discharging times
- Designed for ease of maintenance
- Design allows for continued operation even in the event of a single coil failure
- 230 Volts Standard
- Dual voltage and special voltages available
- Sizes typically manufactured to suit applications





Consult Ohio Magnetics with application and crane specification for proper size selection.

TECHNICAL SPECIFICATIONS

Magnet					Controller	Min.	Magnet Dimensions, Inches							Average Scrap Lift in Lbs.		
Size & Type	Wt. Lbs.	Cold Amps	Cold KW	Duty %	Type	Cable Size	"L"	"W"	"H"	"HR"	"BOW"	"BOH"	"BD"	Plate Punchings	#1 Heavy Melt*	#2 Heavy Melt**
63 x 126 DAWXRM	18,300	185	42.6	50	RD-3A	2- #1/0	126	63	21.00	100.0	9.00	16.00	2.75	14,660	12,540	8,410
68 x 136 DAWXRM	20,725	236	54.3	50	(2) MC-2A	4- #2	136	68	24.25	109.5	9.00	16.00	2.75	18,125	15,500	10,400
73 x 146 DAWXRM	29,820	238	54.7	50	(2) MC-2A	4-#2	146	73	25.25	117.00	9.00	16.00	2.75	21,900	18,590	11,990
83 x 166 DAWXRM	33,000	242	55.7	65	(2) MC-2A	4- #2	166	83	22.50	119.0	9.00	16.00	2.75	26,135	22,090	14,240

* Scrap, No. 1 heavy melting steel as defined by ISIS Code No. 200, 201 or 202
** Scrap, No. 2 heavy melting steel as defined by ISIS Code No. 203, 204, 205 or 206

Repairs

Ohio Magnetics' maintains the most complete magnet repair facility available today and performs complete repairs, economically and timely on all makes and types of lifting magnets.



How to Begin

Arranging for a rebuild diagnosis is as simple as calling Ohio Magnetics or your Ohio Magnetics' sales representative. He will discuss your present application and needs and ask about any planned changes in your operating system, in the event an upgrade might be required. After the initial interview and analysis, you will be given a return authorization number and arrangements will be made to ship your magnet to us for an inspection.

Your Preliminary Inspection

When your magnet is received for inspection, the Ohio Engineering Staff prepares a detailed description of your unit, electrical readings are taken, a thorough mechanical inspection is done, and photo documentation of the project begins.* After the initial inspection is completed, a decision is made as to whether or not your magnet must be opened. At this time, a preliminary suggested course of action is made and estimates on the procedures are quoted.

* Photos are available for your review by e-mail.



Magnet Experts Since 1917...Ohio Magnetics!

For nearly one hundred years, the Stearns™ brand of magnetic separation equipment has been manufactured and used by thousands of customers worldwide. Ohio Magnetics, Inc. is recognized as a world leader in the development of lifting magnets systems and magnetic separation equipment for steel production, metal fabrication, scrap, recycling, mining, utility, foundry, waste recovery, textile, paper/pulp and rail industries.

Ohio Magnetics, Inc. manufactures standard and specialized circular,bi-polar and rectangular lifting magnets as well as power supplies, including rectifiers, power take-off, hydraulic driven generators and magnet controls.

The Stearns™ brand of magnetic separation equipment includes electric magnetic drums for auto shredders, electric or permanent over-the-belt magnets, magnetic pulleys, magnetic road sweepers, specialized wet and dry magnetic separators.

Our customers know they can rely on our wealth of practical experience and manufacturing expertise to assist them develop new ways to improve magnetic system productivity. Our long-term customers know and our newest ones quickly discover that Ohio Magnetics is a company highly attuned to their needs regarding price, delivery and aftermarket services.

When you do business with Ohio Magnetics, you get the products you want that provide top performance and maximum efficiency from job start-up to finish. For value added products that offer long-term service, exceptional performance and low maintenance costs…choose Stearns and Ohio Magnetics, Inc.





OHIO MAGNETICS, INC. ISO 9001 2008 CERTIFIED STEARNS MAGNETICS

OHIO MAGNETICS

SUBSIDIARY OF HBD INDUSTRIES, INC.

5400 Dunham Road
Maple Heights, OH 44137-3687

Phone: 800/486-6446
Fax: 216/662-2911 or 216/662-9526

E-Mail: sales@ohiomagnetics.com
Websites: www.ohiomagnetics.com • www.hbdindustries.com

OM-19804–2/11–1.5M
Printed in U.S.A.