CLV420/421/422
Bar Code Scanner



Standard Line

Small in size, big in user friendliness

The CLV420 product family represents the logical development of miniature bar code readers.
High reading performances and excellent user friendliness are united in a very small housing.
Bar code identification in the case of very high conveyor velocities can also be realised, due to the extraordinary fast scan frequencies.

The CAN and the diagnosis interface, together with the well-established CLV Setup Configuration Software, offer the best in user friendliness for its class. Of course, the innovative adjustment tools, such as Auto Setup and automatic trigger have also been integrated.

Your benefits:

- Code identification even in the case of high conveyor velocities
- Easy setup procedures supported by state-of-the-art software tools
- Various possibilities for diagnosis
- Easy and simple connectivity

The CLV420/421/422 at a glance:

- High scan frequency of 1,200 Hz
- Small housing
- Standard Range, Long Range and High Density Version available
- Angle attachment optional
- Flash memory for firmware
- CAN bus compatible

Stocked, Distributed, and Supported by

SENSORS INCORPORATED

507 Kelsey Street ● Delano, MN 55328
Phone 763-972-1040 Fax 763-972-1041
Toll Free 888-920-0939
Sensorsincorporated.com

SICK
Sensor Intelligence.

CLV420/421/422
Bar Code Scanner

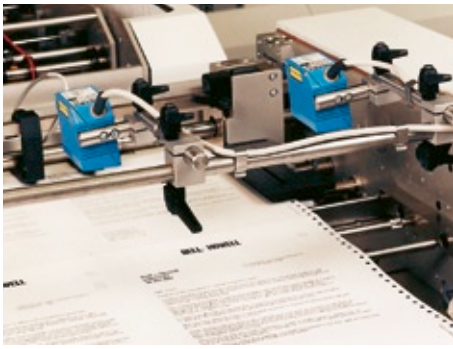

Line/Raster Scanner with front reading window*)

CLV420 Standard Range

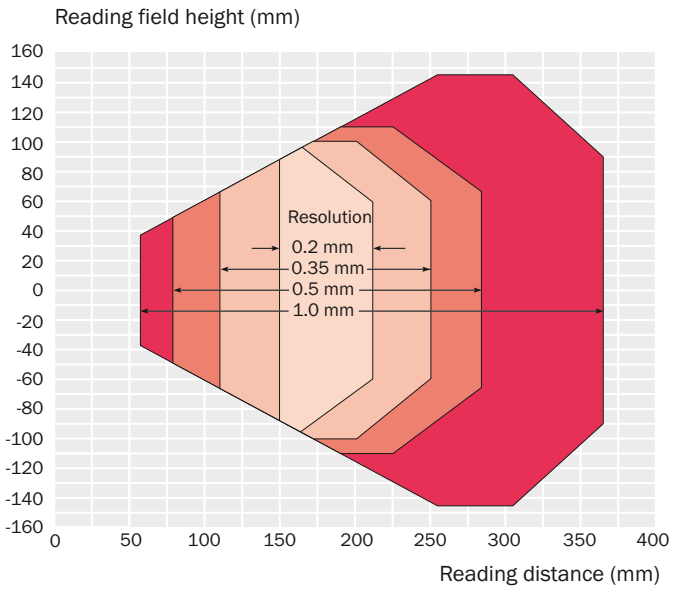

CLV422 High Density

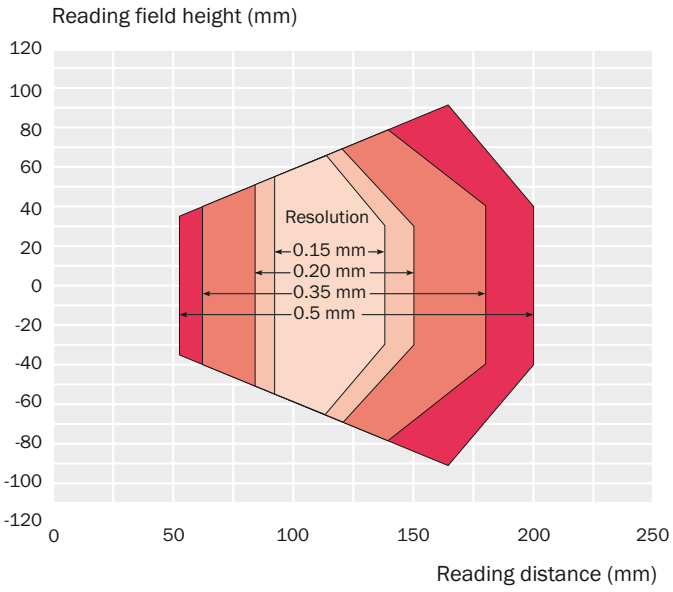

CLV421 Long Range

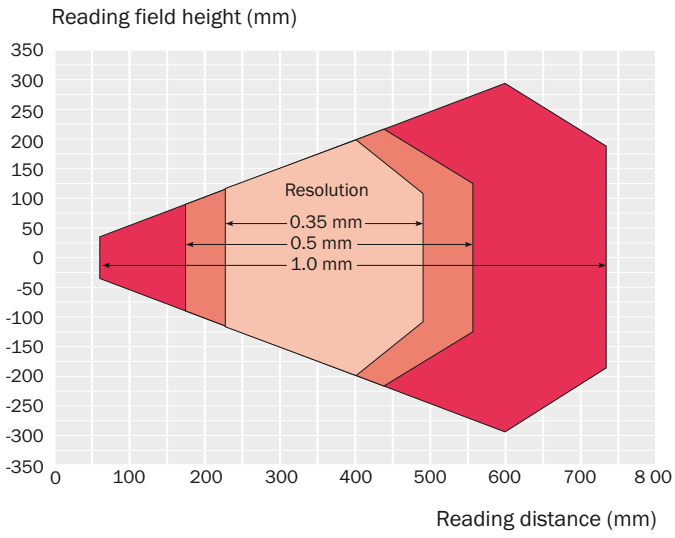

*) Line/Raster Scanner with side reading window:
The whole reading range shifts by approx. 15 mm towards the reading window.

Technical Data Line/Raster Scanner

Type	CLV420 (Standard Range)	CLV421 (Long Range)	CLV422 (High Density)
Line scanner	CLV420-001 Order No. 1022031	CLV421-0010 Order No. 1022547	CLV422-0010 Order No. 1022548
Raster scanner	CLV420-1010 Order No. 1022032	CLV421-1010 Order No. 1022616	CLV422-1010 Order No. 1022619
Line scanner with 105° angle att.	CLV420-2010 Order No. 1022033	CLV421-2010 Order No. 1022617	CLV422-2010 Order No. 1022620
Raster scanner with 105° angle att.	CLV420-3010 Order No. 1022034	CLV421-3010 Order No. 1022618	CLV422-3010 Order No. 1022621
Focus	Fixed focus		
Reading window	Line/raster scanner: front Line/raster scanner with angle attachment: side (angle of emergence 105°)		
Laser diode (wavelength)	red light (λ= 650 to 670 nm)		
MTBF of laser diode	20,000 h		
Laser class	Class 2 (pursuant to DIN EN 60825-1)		
Useful aperture angle	max. 50°		
Scanning/decoding frequency	400 to 1,200 Hz		
Resolution	0.15 to 1.0 mm		
Raster height	15 mm (8 lines) at a reading distance of 200 mm (front reading window)		
Bar code print contrast (PCS)	≥ 60 %		
Immunity to ambient light	2,000 lx (on bar code)		
No. of bar codes per scan	1 to 3		
No. of bar codes per reading interval	1 to 10		
Bar code types	Code 39, Code 128, Code 93, Codabar, EAN, EAN 128, UPC, 2/5 Interleaved, Pharmacode		
Bar code length	max. 50 characters (max. 100 characters across all bar codes per reading interval)		
Print ratio	2:1 to 3:1		
No. of multiple reads	1 to 99		
Optical indicators	4 x LEDs (status indicators)		
Acoustic indicator	Beeper, can be deactivated and assigned to a function for result status indication		
Reading pulse	Reflector polling/“Sensor 1” switching input/free running/serial interface		
“Host” data interface	RS 232 or RS 422/485, variable data output format		
Data transfer rate	300 to 57,600 Bd		
Protocols	SICK Standard and 3964 (R)		
Physical configurations	Stand-alone		
"CAN" data interface	CANopen protocol, CAN Scanner Network		
Data transfer rate	20 KBits/s to 1 MBits/s		
“Terminal” data interface	RS 232, 9,600 Bd, 8 data bits, no parity, 1 stop bit, fixed output format		
Switching inputs	2 (“Sensor 1”, “Sensor 2”)		
Switching outputs	2 (“Result 1”, “Result 2”)		
Electrical connection	15-pin D Sub HD connector, cable length 0.9 m		
Operating voltage/power consumption	10 to 30 V DC*)/3.5 W		
Housing	Cast zinc die-cast, does not represent a problem in paint shops		
Enclosure rating/protection class	IP 65 (to DIN 40 050)/Class 3 (to VDE 0106/IEC 1010-1)		
EMC/vibration/shock tested	to EN 61000-6-2, EN 55011/to IEC 68-2-6 Test FC/to IEC 68-2-27 Test EA		
Weight	250 g with connecting cable (front reading window)		
Operating/storage temperature	0 to + 40 °C/–20 to + 70 °C		
Max. rel. humidity	90 %, non condensing		

*) UL certificated when a class 2 power supply according to UL 1310 is used

Ind.Con.Eq.
c UL us LISTED
4R97

Dimensional drawing

Front Reading Window

CLV420-0010
CLV420-1010
CLV421-0010
CLV421-1010
CLV422-0010
CLV422-1010

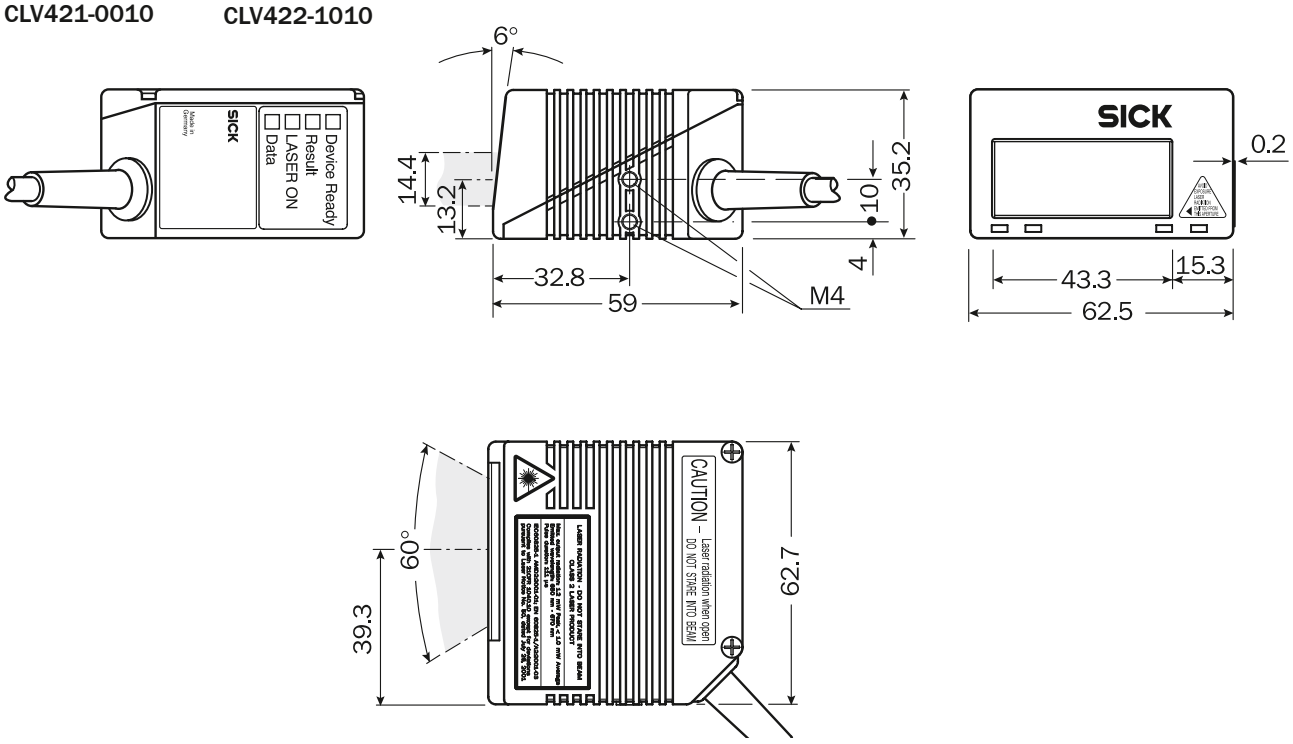

Side Reading Window

CLV420-2010
CLV420-3010
CLV421-2010
CLV421-3010
CLV422-2010
CLV422-3010

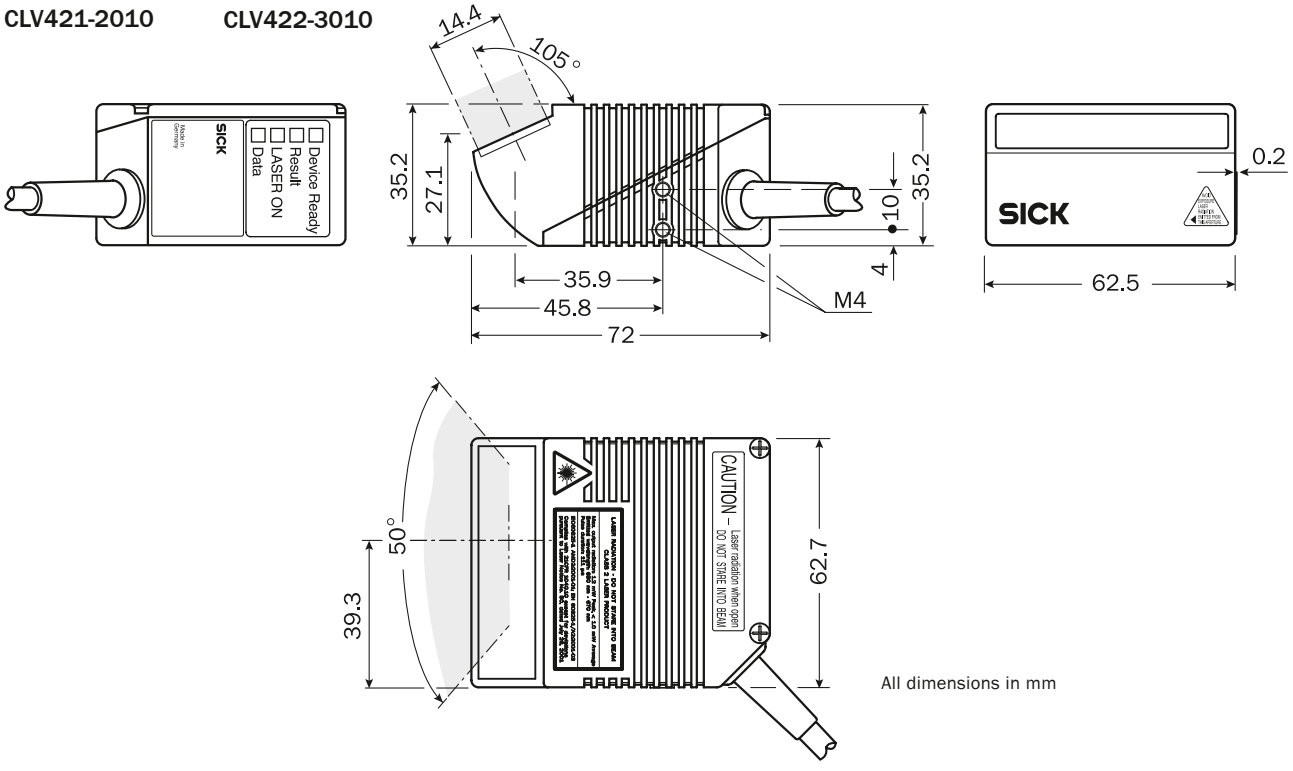

All dimensions in mm

8009376/04-2006 · SGF/FD . Printed in Germany (04-06) • Subject to change without prior notice • 05 Pre int56

SICK AG | Auto Ident | Waldkirch/Reute | Germany
For local sales offices see www.sick.com

SICK
Sensor Intelligence.