Packaging Case Study

ReFlex®

PROJECT DESCRIPTION:

1U & 2U rackmount WAN optimization controllers for a leading manufacturer of WAN networking equipment

PACKAGING CHALLENGE:

Reduce overall cost while providing equal product protection



PACKAGING SOLUTION:

Reflex®custom front/back caps utilzing 100% recycled material content



ORIGINAL PACKAGING SOLUTION:

Fabricated PE Foam Packaging

REFLEX® PACKAGING SOLUTION:

Reflex Thermoformed 4pc Edge Rail Cushions

REFLEX® PACKAGING SOLUTION:

Reflex cushions are custom designed thermoformed protective cushions. They are formed around the specific dimensions of a product and engineered to meet its shock protection requirements. They are nestable and so save up to 85% of warehousing space vs foam. They are also made from 100% recycled content so they are great for the environment.

	Facility Space Savings	Labor Savings	Reduced Damage Rates	Recycled Content	Reduced Material Cost	Package Weight Reduction	Freight Savings	Increased Productivity
VALUE	✓	✓	✓	✓	✓	---	✓	✓
SAVINGS	85%	---	Matched/ Reduced G's	100%	32% Cost Savings	---	14% -43% More Per Pallet	---

PROJECT SPECIFICATIONS:

Test Method: ISTA-2A
Package Weight: 22 lbs - 56 lbs
Drop Height: 26” - 38”
Fragility: 60-70 G's

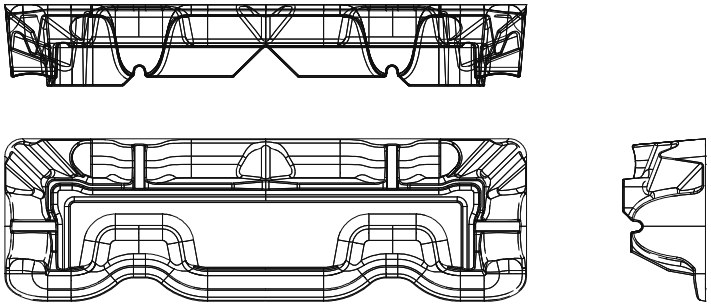

Website: www.reflexpack.com
Tel: 714-619-8520
Fax: 714-619-8570
Reflex Corporate Office USA:
2210 South Huron Drive
Santa Ana, CA, 92704